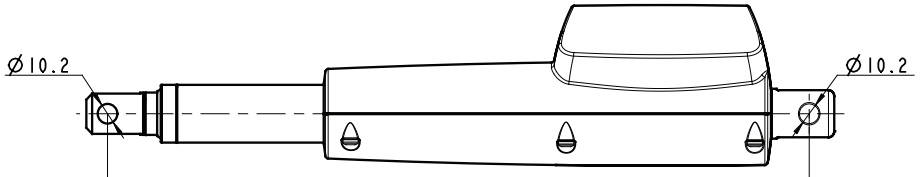

Installation dimension
Stroke =<300 = 200 + Stroke
Stroke >300 = 250 + Stroke
Minimum installation dimension = 300 mm

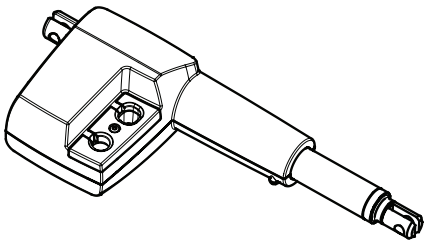

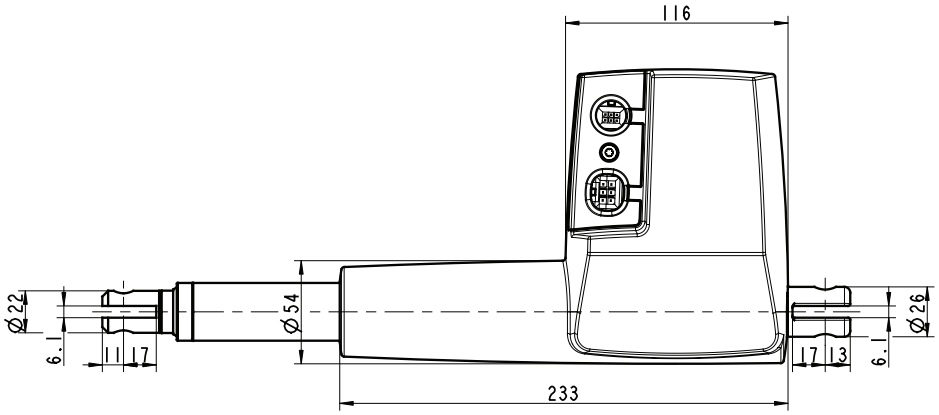

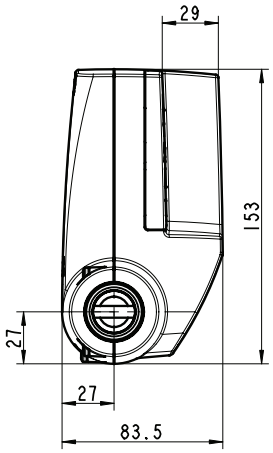

Drawing no.: 0359012

All rights reserved

Date: 17 June 2010

Description:

Linear Actuator LA35

LINAK®
WE IMPROVE YOUR LIFE