MEDLINE® CARELINE®
IMPROVING EFFICIENCY IMPROVING EFFICIENCY

Control Boxes
User Manual

LINAK®
WE IMPROVE YOUR LIFE

Contents

Preface **4**
GENERAL ASSEMBLY INSTRUCTIONS **5**
DECLARATION OF INCORPORATION OF PARTLY COMPLETED MACHINERY **6**
Important information **7**
General warnings **8**
General recommendations **11**
General warranty periods **12**
Electromagnetic Compatibility (EMC) **13**
EMC Warnings 13
EMC responsibilities for LINAK actuator systems 14
Electrostatic discharge (ESD) 15
RF transmitter/receiver properties 16
FCC and IC Statements 16
Symbols **17**
Batteries **19**
General battery warnings 19
Lithium ion batteries 20
Lead acid batteries 23
System description **24**
Connecting the system **24**
General mounting of control boxes **25**
General environmental conditions **26**
Information on start-up, deinstallation and operation **27**
Before installation, deinstallation or troubleshooting 27
Before start-up 27
During operation 27
Cleaning **28**
Cleaning warnings 28
IPX6 Washable 29
Rinsing aids 30
IPX6 Washable DURA™ 31
Cable wash 32
General maintenance **33**
Maintenance of all LINAK control boxes 33
Repair and disposal **34**
Insulation class **35**
Output ratings **35**
Troubleshooting **36**

CA20 ..... **37**
CA30/CA40 ..... **44**
CA63 ..... **56**
CB6 ..... **69**
CB6S MK2 ..... **70**
CB8-A **74**
CB8-T **75**
CB9 ..... **76**
CO41 ..... **78**
CO53 ..... **91**
CO61 MK2 ..... **105**
CO65 ..... **118**
CO71 ..... **131**
OPS – OpenBus Power Supply **144**
PJ2 – Power Junction Box **148**
Contacts **155**

Preface

Dear User,

We are delighted that you have chosen a LINAK® product.

LINAK systems are high-tech products based on many years of experience in the manufacture and development of actuators, lifting columns, desk frames, electric control boxes, controls, batteries, accessories and chargers.

This User Manual does not address the end user. It is intended as a source of information for the equipment or system manufacturer only, and it will tell you how to install, use and maintain your LINAK product/system. The manufacturer of the end product has the responsibility to provide a User Manual where relevant safety information from this manual is passed on to the end user.

We are convinced that your LINAK system will give you many years of problem-free operation.

Before our products leave the factory they undergo full function and quality testing. Should you, nevertheless, experience problems with your product/system, you are always welcome to contact your local supplier.

LINAK subsidiaries and some distributors situated all over the world have authorised service centres, which are always ready to help you.

LINAK provides a warranty on all products (see warranty section).

This warranty, however, is subject to correct use in accordance with the specifications, maintenance being done correctly and any repairs being carried out at a service centre, which is authorised to repair LINAK products.

Changes in installation and use of LINAK systems can affect their operation and durability. The products are only to be opened by authorised personnel.

This User Manual has been written on the basis of the present technical knowledge. LINAK is constantly keeping the information updated and we therefore reserve the right to carry out technical modifications.

The introductory pages of this manual may contain information that is not applicable to the technical product pages and are to be seen as general information for all LINAK products.

LINAK A/S

GENERAL ASSEMBLY INSTRUCTIONS

Please read the following safety information carefully. Ensure that all staff who are to connect, mount, or use the actuator are in possession of the necessary information and that they have access to this assembly instruction.

Persons who do not have the necessary experience or knowledge of the product/products must not use the product/products. Besides, persons with reduced physical or mental abilities must not use the product/products, unless they are under surveillance or they have been thoroughly instructed in the use of the apparatus by a person who is responsible for the safety of these persons. Moreover, children must be under surveillance to ensure that they do not play with the product.



Warnings

Failure to comply with these instructions may result in accidents involving serious personal injury.

It is important for everyone who is to connect, install, or use the systems to have the necessary information and access to the User Manual on www.linak.com.

- If there is visible damage on the product it must not be installed.
- If the control box / Twindrive makes unusual noises or smells, switch off the mains voltage immediately.
- The products must only be used in an environment that corresponds to their IP protection.
- The cleaners and disinfectants must not be highly alkaline or acidic (pH value must be 6 to 8).
- Irrespective of the load, the duty cycle stated in the data sheets, must NOT be exceeded.
- The DESKLINE® systems can only be used in push applications.
- The control box / Twindrive must only be connected to the voltage stated on the label.
- System not specified for pull must only be used in push applications.
- Fastening screws and bolts must be tightened correctly.
- Do not open the closing device on the Twindrive during operation.
- Specifications on the label must under no circumstances be exceeded.
- NOT TO BE OPENED BY UNAUTORISED PERSONNEL.
- Use only the actuator within specified working limits.
- Note that during construction of applications, in which the actuator is to be fitted, there must be no risk of personal injury, such as squeezing of fingers or arms.
- If irregularities are observed, the actuator must be replaced.
- If the actuator is used for pull in an application where personal injury can occur, the following is valid: It is the application manufacturer's responsibility to incorporate a suitable safety arrangement, which will prevent personal injury from occurring, if the actuator should fail.
- MEDLINE® & CARELINE® products products are rated to operate at an altitude < 2000 m.



Recommendations

Failure to follow these instructions can result in the actuator being damaged or being destroyed.

- Before you start mounting/dismounting, ensure that the following points are observed:
  - The actuator is not in operation.
  - The mains current supply is switched off and the plug has been pulled out.
  - The actuator is free from loads that could be released during this work.
- Before you put the actuator into operation, check the following:
  - The actuator is mounted correctly as indicated in the relevant user instructions.
  - The equipment can be freely moved over the actuator's whole working area.
  - The actuator is connected to a mains electricity supply/transformer with the correct voltage and which is dimensioned and adapted to the actuator in question.
  - Ensure that the voltage applied matches the voltage specified on the actuator label.
  - Ensure that the connection bolts can withstand the wear.
  - Ensure that the connection bolts are secured safely.
- During operation
  - Listen for unusual sounds and watch out for uneven running. Stop the actuator immediately if anything unusual is observed.
  - Do not side load the actuator.
  - Use only the actuator within the specified working limits.
  - Do not kick or step on the actuator.
- When the equipment is not in use
  - Switch off the mains supply or pull out the plug in order to prevent unintentional operation.
  - Check regularly the actuator and joints for extraordinary wear.
- Note: If the actuator is operated as a hand crank, it must be operated by hand, otherwise there is a risk of overloading the actuator and hereby damage the actuator.
  When changing the cables on a LINAK actuator, it is important that this is done carefully, in order to protect the plugs and pins.
  Please ensure that the plug is in the right location and fully pressed in before mounting the cable lid.

LINAK®
WE IMPROVE YOUR LIFE

DECLARATION OF INCORPORATION OF PARTLY COMPLETED MACHINERY

LINAK A/S
Smedevænget 8
DK - 6430 Nordborg

LINAK A/S hereby declares that LINAK DESKLINE® products, characterised by the following models and types:

Control Boxes	CBD6S
Linear Actuators	DB5, DB6, DB14, LA23, LA31
Lifting Columns	DL1A, DL2, DL4S, DL5, DL6, DL8, DL9, DL10, DL11, DL12, DL14, DL15, DL16, DL17, DL18, DL19, DL20, DL21, BASE1, LC1
Desk Panels	DPA, DPB, DPH, DPF, DPG, DPT, DP, DP1CS, DPI
Wireless Controls	BP10
Accessories	BA001, BLE2LIN, CHUSB, DESK Sensor, DF2, Kick & Click, SLS, SMPS, USB2LIN, WiFi2LIN, DC Connector, RFRL

LINAK A/S hereby declares that LINAK HOMELINE® products, characterised by the following models and types:

Control Boxes	CBD6DC
Linear Actuators	LA10, LA18, LA40 HOMELINE
Dual Actuators	TD4, TD5
Controls	BP10, HC10, HC20, HC40
Accessories	BA002, CP, BLE2DC, BLE2LIN, LED Light Rail, MD1, SMPS, WiFi2LIN

LINAK A/S hereby declares that LINAK MEDLINE® & CARELINE® products, characterised by the following models and types:

Control Boxes	CA10, CA20, CA30, CA40, CA63, CAL40, CB6, CB6S, CB6P2, CB8, CB9, CBJ2, CBJ Care, CBJ Home, CO41, CO53, CO61, CO65, CO71, COL50, OPS, PJ2, PJB4
Linear Actuators	LA20, LA23, LA24, LA27, LA28, LA29, LA30, LA31, LA34, LA40, LA44
Lifting Columns	BL1, LC1, LC3
Controls	ABL, ACC, ACK, ACO, ACOM, ACL, DP, DPH, FS, FS3, FPP, HB30, HB70, HB80, HB100, HB190, HB200, HB400, HD80, HL70, HL400
Accessories	BA16, BA18, BA19, BA22, BAJ, BAJL, BAL40, BAL50, CH01, CHJ2, CHL40, CHL50, DJB, LIN2OB, MJB2, MJB5 Plus, Massage Motor, PJB4, QLCI2, SLS, SMPS10, UBL, UBL2, UBL4 Motion, USB-A Power Adapter

LINAK A/S hereby declares that LINAK TECHLINE® products, characterised by the following models and types:

Linear Actuators	LA12, LA14, LA23, LA25, LA30, LA33, LA35, LA36, LA37, LA76, LA77
Lifting Columns	LC3 IC
Accessories	FMB

comply with the following parts of the Machinery Directive 2006/42/EC, ANNEX I, Essential health and safety requirements relating to the design and construction of machinery: 1.5.1 Electricity supply

The relevant technical documentation is compiled in accordance with part B of Annex VII and this documentation or part hereof will be transmitted by post or electronically to a reasoned request by the national authorities.

This partly completed machinery must not be put into service until the final machinery into which it is to be incorporated has been declared in conformity with the provisions of the Machinery Directive 2006/42/EC where appropriate.

Nordborg, 2024-07-10

John Kling

LINAK A/S

John Kling, B.Sc.E.E., Certification and Regulatory Affairs

Authorised to compile the relevant technical documentation

Original declaration

Copyright© LINAK • 2024-07 • LIT-09-02-001 D

LINAK® WE IMPROVE YOUR LIFE

Important information

LINAK® products, within the scope of this manual, are not classified as medical electrical equipment or systems, nor do they fall within the scope of the EU Medical Device Directive/Regulation or other similar national regulations. The products are components to be built into a piece of medical electrical equipment by a manufacturer.

To support the assessment and certification task of the complete medical electrical equipment or system worldwide, LINAK provides certification, on a component level, according to the IEC 60601-1, (Medical electrical equipment – Part 1: General requirements for basic safety and essential performance) as recognised components by NRTL (Nationally Recognized Testing Laboratories).

Description of the various signs used in this manual:



Warnings

Failure to comply with these instructions may result in accidents involving serious personal injury.



Recommendations

Failing to follow these instructions can result in product damage.

Please read the following safety information carefully:

Ensure that all staff who are to connect, mount, or use the actuator system are in possession of the necessary information and that they have access to these assembly instructions.

Persons who do not have the necessary experience or knowledge of LINAK products should not use these. Moreover, persons with reduced physical or mental abilities must not use the products, unless they are under surveillance or they have been thoroughly instructed in the use of the equipment by a person who is responsible for the safety of these persons. Moreover, children must be under surveillance to ensure that they do not play with the product.

Please be aware that LINAK has taken precautions to ensure the safety of the actuator system. The manufacturer/OEM is responsible for the overall approval of the complete application.



LINAK recommends to use the actuators in push applications rather than pull applications.



LINAK actuators are not to be used for repeated dynamic push-to-pull movements.

For general pull applications or repeated dynamic push-to-pull movements in the application, please contact LINAK A/S if in doubt.

LINAK actuators and electronics generally fall outside the IEC 60601-1 definition of applied parts and are not marked as such.

However, assessing the risk whether actuators and electronics can unintentionally come into contact with the patient, determines that they are subject to the requirements for applied parts. All the relevant requirements and tests of the standard are carried out as part of the IEC CB* Scheme/NRTL** assessment.

* CB: Certification Body

**NRTL: Nationally Recognised Testing Laboratory

General warnings

Failure to comply with these instructions may result in accidents involving serious personal injury:

The medical device manufacturer is responsible for the incorporation of a suitable safety arrangement, if the actuator or lifting column is used for pull in an application where personal injury can occur, which will prevent personal injury from occurring in case of actuator failure.

Note that during construction of applications, in which the actuator is to be fitted, there must be no possibility of personal injury, for example the squeezing of fingers or arms.

The plastic parts in the system cannot tolerate cutting oil.

Assure free space for movement of the application in both directions to avoid a blockade.

The application and actuators are only to be operated by instructed personnel.

In applications with spline function, the blockage by an obstacle when the application is moving inwards, the removal of the obstacle will cause the load to drop until the spindle hits the nut.

Do not turn the outer tube.

Do not use chemicals.

Inspect the actuator system regularly for damage and wear.

Do not expose LINAK actuator system components to high intensity ultraviolet radiation disinfection lamps. This may damage the enclosure, supporting parts and cables.

LINAK actuators and electronics are not designed for use within the following fields:

- In the presence of a flammable anesthetic mixture with air or with oxygen or nitrous oxide
- Planes and other aircrafts
- Explosive environments
- Nuclear power generation

If faults are observed, the products must be replaced.

A LINAK control box, actuator and accessory component must, in the final application, be placed where it is not exposed to any impact. This is to prevent damage if a passer-by accidentally hits it with an object or when cleaning the floor with a broom or a mop. On a medical bed e.g. this might be underneath the mattress support platform. If necessary to mitigate this risk, additional protection might be required.

To avoid unintended movement, prevent foreign objects or persons from unintentionally activating a footswitch or a hand control at any time, for instance during normal use or maintenance.

If there is visible damage on the product it should not be installed.

If the actuator system makes unusual noise or smells, switch off the mains voltage immediately and disconnect batteries, if applicable.

The products must only be used in an environment that corresponds to their IP protection class.

The cleaners and disinfectants must not be highly alkaline or acidic (pH value 6-8). See cleaning section.

Irrespectively of the load, the duty cycle stated on the product label must NOT be exceeded.

The control box must only be connected to the voltage stated on the label.

Systems not specified for pull must only be used in push applications.

Fastening screws and bolts must be tightened correctly.

Specifications on the product label must under no circumstances be exceeded.

NOT TO BE OPENED BY UNAUTHORISED PERSONS.

Only use the actuator within specified working limits.

Be aware that during the design of medical devices, the risk of personal injury (for instance squeezing of fingers or arms) must be minimised.

If irregularities are observed, the actuator must be replaced.

All cables must be mounted in such a way that they are not trapped or exposed to tension or sharp objects when the application is moved in different directions.

General recommendations

Failing to follow these instructions may result in actuator system damage:

The duty cycle printed on the actuator system label must always be respected. If exceeded, there is a risk that the actuator system is damaged. Unless otherwise specified on the label, the duty cycle is max. 10%, max. 2 min. in use followed by 18 min. not in use.

All detachable connections between components must be locked by the cable locking mechanism - when applicable.

It is recommended to have options like quick release, manual lowering or similar built into the system in case of power loss or system failure or if movement of the system is critical. After service it is recommended to test the system for correct functionality before it is put back into operation.

Prior to assembly/disassembly, ensure that the following points are observed:

- The actuator system is not in operation.
- The mains current supply is switched off and the plug has been pulled out.
- Batteries - if applicable - may also power the system.
- Actuators are free from loads that could be released during this work.

Prior to operating the actuator system, check the following:

- Actuator system components are correctly mounted as indicated in the product-specific user instructions.
- The equipment can be operated in its entire intended range of movement.
- Ensure that the load-supporting bolts can withstand the wear.
- Ensure that the load-supporting bolts are secured safely.

During operation:

- Listen for unusual sounds and watch out for uneven movement. Stop the actuator system immediately if anything unusual is observed.
- Do not sideload the actuator.
- Do not step on or kick any LINAK component.

When the equipment is not in use:

- Switch off the mains supply or pull out the plug in order to prevent unintentional operation.

Cables and plugs:

- It is important to remove the transport plastic bag before using the cable.
- When changing the cables on a LINAK® actuator system, it is important that this is done carefully in order to protect the plugs and pins.
- Please ensure that the plug is in the right location and properly inserted before the cable lid is mounted.

General warranty periods

As general warranty period, LINAK provides 5 years (60 months) warranty on MEDLINE and CARELINE products used in beds and medical applications. If MEDLINE and CARELINE products are used in other applications, they will be covered by 1½ years (18 months) warranty.

Batteries are covered by a specific product warranty of 12 months.

External products that are not manufactured by LINAK A/S: 12 months are added to the warranty period, for instance for transportation and stocking. Relabelling of these products only takes place, if the production date exceeds one year from the date of dispatch to the customer.

If there is any doubt whether returned products are covered by the warranty, they are covered by the warranty. Please use the date of the control box or actuator as reference, if possible.

Electromagnetic Compatibility (EMC)

EMC Warnings

Electromagnetic compatibility – general

LINAK® actuator systems bear the CE marking as an attestation of compliance with the EMC Directive 2014/30/EU. The systems are designed to meet all requirements of applicable standards and have been tested to meet IEC 60601-1-2 requirements.

Emission:

LINAK Actuator Systems are CISPR 11, Group 1, Class B products, comply with IEC 61000-3-2, Class A and IEC 61000-3-3.

Immunity:

Test levels are according to Professional Healthcare Facility and Home Healthcare Facility Environment.

Electromagnetic phenomena are evaluated on a system level, with the actuator connected to a LINAK control box and accessories.

LINAK always recommends to perform verification tests on the final medical device.

Electromagnetic compatibility – third party components

Use of accessories, transducers and cables other than those specified by LINAK could result in increased electromagnetic emissions or decreased electromagnetic immunity of the actuator system and result in improper operation.

Electromagnetic compatibility – interference with other equipment in general

Use of the actuator system adjacent to or stacked with other equipment should be avoided as this could result in improper operation. If such use is necessary, the actuator system and the other equipment should be observed to verify that they are operating properly.

If the user notes unusual behavior of the actuator system, in particular if such behaviour is intermittent and associated with the standing right next to mobile phones, microwaves and radio broadcast masts, this could be an indication of electromagnetic interference.

If such behaviour occurs, try to move the actuator system further away from the interfering equipment.

Electromagnetic compatibility – interference with other equipment, RF communications

Portable RF communication equipment (including peripherals such as antenna cables and external antennas) should be used at a distance no closer than 30 cm (12 inches) to any part of the actuator system. This also applies to cables specified by the manufacturer. Otherwise, a performance degradation of this equipment could result.

EMC responsibilities for LINAK actuator systems

LINAK verifies the EMC performance of each LINAK product and approves them individually. The LINAK products can be combined and integrated into many different systems. LINAK also verifies the system EMC performance on commonly used combinations.

LINAK has certificates in accordance with applicable standards for each product and provides the customers, who are building the application and integrating these products into systems (systems with control box, actuators, cables, batteries, etc.), with these certificates.

However, EMC testing of LINAK products in generic LINAK systems is not made in an environment that corresponds to the specific application environment which differs from the generic testing environment. There will be differences that can affect the EMC performance in the specific target application.

The customer is responsible for qualifying and approving the complete application including the LINAK system.

Regulatory standard

LINAK products, being components to be incorporated by a Manufacturer [definition: IEC 60601-1 ed.3.1, cl. 3.55] into Medical Electrical Equipment [definition: IEC 60601-1 ed.3.1, cl. 3.63], are tested concerning the EMC phenomena according to the Collateral Standard IEC 60601-1-2 ed. 4.1.

IEC 60601-1-2 ed. 4.1 sets forth the requirements for the electromagnetic compatibility of Medical Electrical Equipment, ensuring that devices operate safely and effectively within their intended environments. Compliance with this standard is essential to minimize electromagnetic interference and maintain the integrity and performance of Medical Devices.

Furthermore, IEC 60601- 1-2 ed. 4.1 states:

"This collateral standard recognizes that the Manufacturer has the responsibility to design and perform Verification of Medical Electrical Equipment and Medical Electrical Systems to meet the requirements of this Collateral Standard and to disclose information to the Responsible Organization or Operator so that the Medical Electrical System will remain safe throughout its Expected Service Life."

Qualification process of a new application

The qualification process for a new application is normally done in cooperation between the customer and LINAK. LINAK provides the relevant support, competence and documentation needed for the customer's overall development plan and test plan for the specific application.

The driver of the qualification process is the customer who has the ultimate application responsibility (MDS). The customer identifies and specifies the needed testing based on many different parameters (experience, risk management, requirements from standards, etc.).

In many cases, the customer is establishing and verifying tests early in the project to ensure that the approval process has a low risk of failing when tested in the approval institute.

The customer identifies which tests to make and when they are to be performed in the project to mitigate the risk of failure in the approval process which also includes EMC testing.

Electrostatic discharge (ESD)

LINAK® considers ESD to be an important issue and years of experience have shown that equipment designed to meet the levels specified in standards might be insufficient to protect electronic equipment in certain enviroments.

1. Handling and mounting electrostatic discharge sensitive devices (ESDS devices).

- Handling of sensitive components shall only take place in an ESD Protected Area (EPA) under protected and controlled conditions.
- Wrist straps and/or conductive footwear (personal grounding) shall always be used when handling ESDS devices.
- Sensitive devices shall be protected outside the EPA by the use of ESD protective packaging.

2. Responsibility LINAK/customer

- ESDS devices must under no circumstances, during transport, storage, handling, production or mounting in an application, be exposed to harmfull ESD.
- LINAK can only guarantee the lifetime of ESDS devices if they are handled in the same way from production at LINAK A/S until they are mounted in the manufacturer's application. It is therefore important that the ESDS devices are not removed from the ESD protected packaging before they are physically within the EPA area at the customer premises.

Please refer to EN61340 for further information:

EN61340-5-1, Electrostatics - Protection of electronic devices from electrostatic phenomena - General requirements

EN61340-5-2, Electrostatics - Protection of electronic devices from electrostatic phenomena - User guide

RF transmitter/receiver properties

Some LINAK products emit RF-power by intention for communication purposes.

Frequency band of transmission: 2402 MHz - 2480 MHz

Type: BLUETOOTH® Low Energy BLE 4.2

Modulation: GFSK

Maximum Effective Radiated Power (ERP): 10 dBm

FCC and IC Statements

For RF-emitting products (e.g. Bluetooth®, Wi-Fi) intended to be used on the North American continent, the following applies:

FCC statement

NOTE: This equipment has been tested and found to comply with the limits for a Class B digital device, pursuant to part 15 of the FCC Rules. These limits are designed to provide reasonable protection against harmful interference in a residential installation. This equipment generates uses and can radiate radio frequency energy and, if not installed and used in accordance with the instructions, may cause harmful interference to radio communications. However, there is no guarantee that interference will not occur in a particular installation. If this equipment does cause harmful interference to radio or television reception, which can be determined by turning the equipment off and on, the user is encouraged to try to correct the interference by one or more of the following measures:

- Reorient or relocate the receiving antenna.

- Increase the separation between the equipment and receiver.

- Connect the equipment into an outlet on a circuit different from that to which the receiver is connected.

- Consult the dealer or an experienced radio/TV technician for help

Changes or modifications not expressly approved by the party responsible for compliance could void the user's authority to operate the equipment.

This device complies with Part 15 of the FCC Rules. Operation is subject to the following two conditions:

(1) this device may not cause harmful interference, and

(2) this device must accept any interference received, including interference that may cause undesired operation.

IC statement

This device contains licence-exempt transmitter(s)/receiver(s) that comply with Innovation, Science and Economic Development Canada's licence-exempt RSS(s). Operation is subject to the following two conditions:

(1) This device may not cause interference.

(2) This device must accept any interference, including interference that may cause undesired operation of the device.

L'émetteur/récepteur exempt de licence contenu dans le présent appareil est conforme aux CNR d'Innovation, Sciences et Développement économique Canada applicables aux appareils radio exempts de licence. L'exploitation est autorisée aux deux conditions suivantes :

(1) L' appareil ne doit pas produire de brouillage;

(2) L' appareil doit accepter tout brouillage radioélectrique subi, même si le brouillage est susceptible d' en compromettre le fonctionnement.

Symbols

The following symbols are used on the LINAK product labels, where applicable:

	IEC 60417-5172: Class II equipment		Compliance to all relevant EC directives
	IEC 60417-5840: Applied part type B		UK Conformity Assessment
	IEC 60417-5019: Class I equipment Protective earth; protective ground		Regulatory compliance mark: The Australian Safety/EMC Regulations
	IEC 60417-5002: Positioning of cell		Alternating current
	ISO 7000-0434A: Caution, consult accompanying document		Direct current
	ISO 7000-1641 Operating instructions		Reduced ETL recognised component mark for Canada and the United States. X: The mark is always accompanied by a control number of 6 or 7 figures. For complete description, see ETL marking on next page.
	Electronics scrap		
	Electronics scrap		Bluetooth®
Li-ion	Recycle		Japanese TELEC
	Recognised Component mark for Canada and the United States		
	PSE diamond mark		
	PSE circle mark		

Electrical Testing Laboratories (ETL) marking

Due to space limitations, the complete ETL marking demands are not represented on the marking plates.

The full ETL recognised component markings are shown here:

C/N 120690
Conforms to ANSI/AAMI Std. ES60601-1
Cert. to CSA Std. C22.2 No. 60601-1

C/N 4008004
Conforms to ANSI/AAMI Std. ES60601-1
Cert. to CSA Std. C22.2 No. 60601-1

C/N 4008838
Conforms to ANSI/AAMI Std. ES60601-1
Cert. to CSA Std. C22.2 No. 60601-1

C/N 9901916
Conforms to ANSI/AAMI Std. ES60601-1
Cert. to CSA Std. C22.2 No. 60601-1

C/N 4008005
Conforms to ANSI/AAMI Std. ES60601-1
Cert. to CSA Std. C22.2 No. 60601-1

C/N 4008671
Conforms to ANSI/AAMI Std. ES60601-1
Cert. to CSA Std. C22.2 No. 60601-1

C/N 4008003
Conforms to ANSI/AAMI Std. ES60601-1
Cert. to CSA Std. C22.2 No. 60601-1

C/N 4008623
Conforms to ANSI/AAMI Std. ES60601-1
Cert. to CSA Std. C22.2 No. 60601-1

C/N 4009507
Conforms to ANSI/AAMI Std. ES60601-1
Cert. to CSA Std. C22.2 No. 60601-1

Batteries

General battery warnings



Handle batteries carefully. Do not short circuit the battery.



Avoid continuous battery discharge when the medical device is not in use, as this may cause lead sulphate formation, which, if left in this state for too long, will irreversibly damage the battery.



LINAK battery packs may emit flammable gases. Do not expose the battery packs to fire or equipment that emits sparks. Moreover, do not store the battery in a closed environment or incorporate it into a closed structure of an enclosure as this may cause an explosion, fire, equipment damage, or injury.



Handle tools carefully and do not wear jewelery when handling batteries. A short-circuit of the battery terminals can cause burn injuries, damage or trigger explosions.



Only connect LINAK batteries to compatible chargers.



LINAK battery packs contain toxic substances. If the internal battery fluid leaks out and gets onto skin or clothing, make sure it is washed off with clean water. Moreover, if the fluid gets into the eyes, rinse them immediately with clean water and seek medical assistance.



Do not use or store LINAK battery packs in places where the ambient temperature exceeds 50 °C, such as inside a hot automobile, in direct sunlight, or in front of a stove or a source of intense heat. Doing so can shorten the battery life, lower its performance level, cause the battery to leak fluid, explode, cause fire, or be damaged.

Lithium ion batteries

Li-Ion batteries are moving in the direction of minimising the physical size and, at the same time, increasing the capacity. This gives a very compact battery with a high energy concentration. It also increases the risk of thermal runaway (see note below) due to internal short circuits.

The general use of Li-Ion batteries has increased, and the inherent risk of thermal runaway has led to stricter rules within the transport industry, specifically air transport with tightened restrictions on the quantity, handling, and storage of specific products.

The OEMs and consumers must recognise that although safe to use, Li-Ion cells always have a very small risk of thermal runaway. The risk could be as little as 1 PPM or even less.

LINAK currently bases our Li-Ion battery design on cell types with an industry-proven history (e.g. electric cars). The use of well-proven cell technology reduces the risk of thermal runaway, but it does not eliminate it. LINAK has completed activities to reduce this risk and the complete battery package is approved in accordance with UL.

An external, internationally recognised expert has also reviewed the design to ensure that it is manufactured according to the latest recommendations. Further to that, we only use cells from well-recognised manufacturers.

LINAK recommends that when using Li-Ion batteries, the customers should carry out proper risk analysis on their application. The risk analysis must also take into consideration that these products are not mounted in positions where they are in direct contact with flammable materials.

LINAK Li-Ion batteries have no greater risk of thermal runaway than other Li-Ion cells from well-recognised manufacturers within the market. Therefore, LINAK cannot take responsibility for any failures that occur due to a failure that is inherent in the nature of Li-Ion batteries.

If any of the Li-Ion batteries built into LINAK products are found to be defective under warranty, LINAK will provide the OEM with a new product. LINAK explicitly disclaims all other remedies. LINAK shall not in any event be liable under any circumstances for any special indirect punitive incidental or consequential damages or losses arising from any incident related to the inherent risk of thermal runaway in the Li-Ion cell and any use of LINAK products. Moreover, LINAK explicitly disclaims any responsibility for profit loss, failure to realise expected savings, any claim against our customer by a third party, or any other commercial or economic losses of any kind, even if LINAK has been advised of the possibility of such damages or losses.

Note: ‘Thermal runaway’ is overheating of a cell, and it could lead to a small fire and smoke from the cell.

Transportation

The lithium ion batteries must be packed and transported in accordance with applicable regulations. Always ask your local transportation provider how to handle the transportation of lithium ion batteries.

Please see the general assembly instructions and the mounting section for detailed information.

Warnings

When using Li-Ion batteries with patient lift control boxes, loss of power might happen due to the battery deep discharge protection. This will only happen in case of continuous battery use despite warnings. In this event, there may be no warning, and the application may not be able to move when expected.

In his risk analysis, the customer must take into consideration how to assure alternative means to make movement, for instance quick release or manual lowering.

Do not open the battery housing as damaging the cell or circuitry may develop excessive heat.

If product caution is not clearly visible at low light intensity, read the product label instructions symbol. A warning must be included in the application manufacturer manual for the medical device.

The application manufacturer must test the application and ensure that intentional and unintended operations do not exceed the battery specification limits.

Defective or damaged Li-Ion batteries are not allowed for transportation.

For safety reasons, please adhere to the indicated charging and operation temperature.

In case the battery is too hot, disconnect it, evacuate the room, and wait for 2 hours before taking further steps.

Mounting instructions must be followed in order to avoid exposing batteries to water.

In general, recharging of batteries must take place every 12 months. However, please note:

- New Li-Ion batteries, shipped from LINAK are in a deep-sleep state, where the self-discharge is very little
- When mounted in an application, LINAK Li-Ion batteries wake up, resulting in a higher rate of charge, depending on the application/system
- Application manufacturer must consider this idle consumption for his specific system and make precautions to avoid discharged batteries.
- Contact your LINAK sales team for further information

If batteries are to be shipped by air, they shall not be charged to more than 30%

Disposal of the battery takes place in accordance with local regulations.

Recommendations

- Do not exceed the storage temperature as it will shorten the product life and performance.
- Allow the battery to settle to room temperature before use.
- Lithium ion batteries are not intended for use in outdoor applications and indoor pool environments.
- If the battery is completely discharged, then recharge the battery before storage.
- Always use correct LINAK charger

DO NOT:

- Heat or burn the batteries.
- Expose the batteries to high impact/excessive force.
- Crush or puncture the batteries.
- Use batteries with signs of damage or corrosion.
- Charge or store the batteries near combustible material.
- Exceed IP-ratings.
- Overcharge or fully discharge the batteries.

Safety feature

Lithium ion batteries contain several mechanisms to protect themselves from being damaged due to excessive use. In case of overheating, the device will activate a thermal protection. No power output will be available until the temperature is again within normal operating range.

Overheating may occur by extensive use at high temperatures or when exceeding the duty cycle (see product label).

Lead acid batteries

Maintenance of batteries

Prior to first use of LINAK® batteries, please make sure that they are charged at least 24 hours and if possible even longer for proper functioning and prolonging the battery lifetime.

Replacement of batteries

The batteries must only be replaced by the same type of batteries or mechanical and electrical equivalent types. The batteries must be new or maintained by means of charging at least every 6 months. The batteries, which make a set, must be supplied with identical production codes.

Production code mismatch may lead to a severely reduced lifetime expectancy.

Before mounting, ensure that the battery set is correctly connected, compare with the drawing in the battery room and check that no connectors are loose.

Warnings in connection with battery replacement

Please observe the following maintenance, replacement, and disposal requirements to ensure a safe and reliable operation.

The batteries are to be replaced after 4 years at the latest. Perhaps earlier, depending on the pattern of use. Frequent and high-powered discharges reduce the battery life. For an optimum lifetime, the product must be connected to the mains voltage as often as possible. It is recommended that the batteries are to be charged for at least every 6 months - otherwise the batteries will have reduced capacity due to self-discharge. It is recommended to test the battery function at least once every year.

The battery compartment is hermetically separated from the electronics compartment. When replacing the batteries this separation must not be damaged or modified as this may allow penetration of battery gas into the electronics compartment with risk of explosion.

When replacing batteries in waterproof products (IPX5 and IPX6), precautions must be taken that the sealing material (silicone ring or joint filler) is not damaged and that it is correctly placed in the groove. Hereafter, the screws in the cover are to be fastened with approx. 1 Nm.
If necessary, replacement sealing is available at LINAK.

The battery compartment is supplied with ventilation that ensures correct and necessary airing of the battery compartment. This airing must not be blocked or covered as a positive pressure may occur with risk of explosion.

If the product has been exposed to mechanical overload (lost on the floor, collision/squeezing in the application or a powerful stroke), the product must be sent to an authorised workshop for control of the hermetic separation between the battery and electronics compartment.

Disposal

Lead acid batteries must be disposed of in the same way as car batteries. Alternatively, they may be returned to LINAK.

System description

LINAK® actuators, lifting columns and electronics have been developed for use in all places where a linear movement is required.

LINAK products can for example be used for:

- Adjustment of beds
- Patient lifts within the care and hospital sector
- Adjustment of dentist chairs/gynaecological chairs

Connecting the system

Do not connect the mains cable until all actuators and hand controls have been connected to the control box.

Start by connecting the hand control to the control box. The connection in the control box is marked with "HB".

Connect the different actuators to the different channels on the control box. Each channel is marked with a number (e.g. "1", "2", "3".....).

Check that all plugs are well connected and firmly pushed into the connector. Due to the fact that LINAK® control boxes are designed for a high IP degree, a firm force can be required.

Connect the mains cable.

The actuators can now be operated by pressing a button on the hand control button.

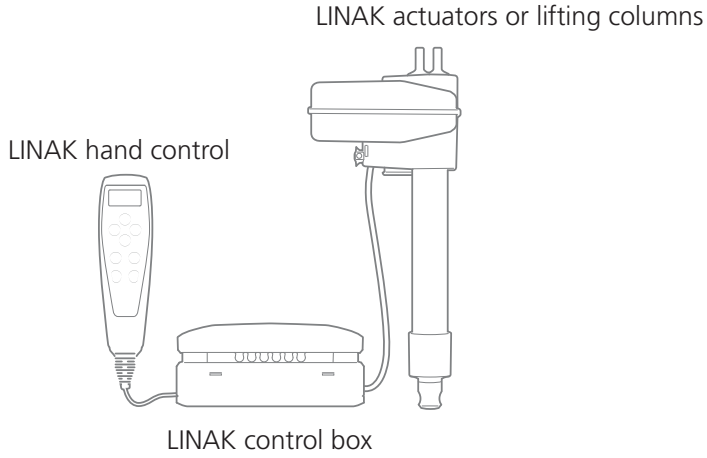

Any non-detachable power supply cord with mains plug is considered to be the disconnecting device.

Charging is only allowed in dry environment, and the appliance inlet must be thoroughly dried before connecting to mains.

General mounting of control boxes

- If applicable, the mounting screws on the control box must be tightened with a maximum torque of 1 Nm
- If applicable, the mounting surface to which the control box is attached should have a surface evenness better than ± 0.5 mm
- Systems must not be installed/deinstalled while in operation
- Nuts and bolts must be made of steel
- Nuts and bolts must be tightened securely
- For control boxes with earth connection (Class 1), the nut must be tightened with a torque of 1-1.2 Nm

General environmental conditions

Operating, storage and transport	
Operating temperature	+5 °C to +40 °C
Relative humidity	20% to 80% - non-condensing
Atmospheric pressure	700 to 1060 hPa (Rated to be operated at an altitude ≤ 3000 m)
Storage temperature	-10 °C to +50 °C
Relative humidity	20% to 80% - non-condensing
Atmospheric pressure	700 to 1060 hPa (Rated to be stored at an altitude ≤ 3000 m)
Transport temperature	-10 °C to +50 °C
Relative humidity	20% to 80% - non-condensing
Atmospheric pressure	700 to 1060 hPa (Rated to be transported at an altitude ≤ 3000 m)
If the actuator is assembled in the application and is exposed to push or pull during transportation, the actuator can be damaged. Do not drop a LINAK component or otherwise damage the housing during disassembly or transportation. We do not recommend to use a LINAK component that has been damaged.	

Information on start-up, deinstallation and operation

Before installation, deinstallation or troubleshooting

- Stop the actuator/lifting column.
- Switch off the power supply or pull out the mains plug and pull out the plug to the actuator/lifting column.
- Relieve the actuator/lifting column of any loads, which may be released during the work.

Before start-up

- Make sure that the system has been installed as instructed in the relevant product manual.
- The individual parts (actuator/lifting column/hand controls etc.) must be connected before the control box is connected to the mains.
- Make sure that the mains voltage to be connected to the product or the system is the one stated on the label.
- The equipment can be moved freely over the whole working area of the actuator/lifting column.
- Check correct function after mounting.
- The actuator/lifting column must not be loaded in excess of the values indicated in the specifications on the product label.
- The duty cycle noted on the product label must always be observed. Otherwise there is a risk of product damage. Exceeding the duty cycle will result in a dramatic reduction of the system lifetime.
- Unless specified otherwise on the product label, the duty cycle is max. 10%, max. 2 minutes in use followed by 18 minutes not in use.
- The actuator/lifting column system may only be used in an environment corresponding to the IP rating of the system. LINAK products are marked with the actual IP rating on the label.
- If any individual parts are suspected to be damaged, do not install the parts, but return them for inspection/service.

During operation

- Check for unusual sounds and irregular movement. Stop the actuator/lifting column immediately if anything unusual is observed.
- If the control box makes unusual noises or smells, switch off the mains voltage immediately and the external battery, if any.
- Take care that the cables are not damaged.
- Unplug the mains cable on mobile equipment before it is moved.

Cleaning

The products can be cleaned as described in the following according to their IP protection stated on the product label.

The IP code specifies the protection degree provided by the enclosures. For most products, only the protection against ingress of water (second characteristic numeral) is specified, ingress of solid foreign objects or dust (first characteristic numeral) is not specified and therefore replaced by the letter X in the code.

IP protection	Cleaning instructions
IPX0	Clean with a damp cloth
IPX1	Clean with a damp cloth
IPX2	Clean with a damp cloth
IPX3	Clean with a damp cloth
IPX4	Clean with a damp cloth
IPX5	Wash with a brush and water, but not water under pressure
IPX6	Wash with a brush and water. The water can be under pressure, but the system must not be cleaned directly with a high pressure cleaner. Max. 20 oC
IPX6 Washable according to IEC 60601-2-52	Clean by the use of wash tunnels according to IEC 60601-2-52
IPX6 Washable DURA™	Clean by the use of wash tunnels according to IEC 60601-2-52, extended washing cycle test

To avoid degreasing of the piston rod, the actuator should be retracted to minimum stroke and without load before washing.

Cleaning warnings

The systems must not be sprayed directly with a high pressure cleaner.

Interconnecting cables must remain plugged in during cleaning to prevent water ingress.

Cleaning with a steam cleaner is not permitted

UV cleaning is not permitted.

IPX6 Washable

LINAK® washable products frequently undergo a fully regulated washing test.

At LINAK, 'IPX6 Washable' means that the products conform only to this test.

Standard washing procedure

Reference: The standard IEC 60601-2-52 newest revision, which includes special demands to fundamental safety and relevant functional characteristics for hospital beds.
The demands for the washing process are described in the German "Maschinelle Dekontamination" from the organisation AK-BWA (Arbeitskreis Bettgestell- und Wagen-Dekotaminationsanlagen).

Description: At LINAK, the washing test takes place in an instrument washing machine, which is fitted and programmed in such a way that it duplicates the process used in a typical hospital installation for the cleaning of beds and other medical equipment.
During the test, the products are exposed to both thermal and chemical effects.
To avoid degreasing of the piston rod, the actuator should be retracted to minimum stroke and without load before washing.

Preparation: As plastic materials to a larger or lesser degree change characteristics and shape with time and climatical exposure, an ageing of the products is carried out first. The conditions for ageing are 65 °C +/- 2 °C in normal dry air for 10 days followed by a minimum of 16 hours at room temperature before the washing process starts.

Water: Degree of hardness, no more than 5° dH and no demineralised water.

Detergents: **LINAK recommends the following products:**

Sekumatic FDR or FRE from Ecolab

Neodisher Dekonta from Dr. Weigert

Thermosept NDR from Schülke or similar with a pH-value of 5 - 8 and in a concentration of 0.5 %

Rinsing aids

LINAK® recommends the following products:

- Sekumatic FKN from Ecolab
- Neodisher BP or TN from Dr. Weigert
- Thermosept BSK from Schülke or similar with a pH-value of 5 - 8 and in a concentration of 0.2 %.

Demands to chemicals:

- They must not contain caustic solutions
- They must not change the surface structure or adhesive properties of the plastic
- Must not break down grease

LINAK washing profile according to IEC 60601-2-52

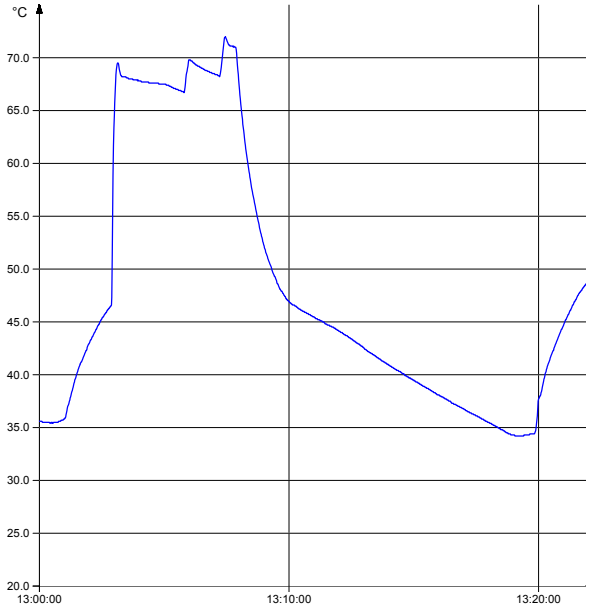

LINAK washing machine



IPX6 Washable DURA™

Description of washing test

LINAK washable products frequently go through a fully controlled washing test. The LINAK term "IPX6 Washable DURA" signifies that the products conform exclusively to this test.

The "IPX6 Washable DURA" washing test is used to ensure that products that are rated "IPX6 Washable DURA" comply with the agreed terms and conditions. This washing test differs from the norm EN60601-2-52 as the products are not aged and each washing cycle is followed by a 30 minute cooling process.

Further information regarding the washing process can be found in the German document "Maschinelle Dekontamination" from the organisation AK-BWA.

Estimated time consumption: Approximately 1 month.

Amount of samples: During the development process, the number of tested samples is in accordance with GP082. During running production, the number of tested samples complies with UM-41-22-001.

General: The process applies to the IPX6 Washable DURA system.

Test conditions:

- The units are not aged.
- Products with adhesive foils must be hardened before ageing.
- The hardening time depends on the used adhesive, but is typically 3 days at 20°C.
- The units are washed with new plugs/cables.
- The cables should be as long as possible and free ends should be shut off.
- Detergent and rinsing aids used:
  - Detergent 1: DR. WEIGERT neodisher Dekonta AF
  - Rinsing aid 1: DR. WEIGERT neodisher TN

Test procedure:

- The units are placed in the washing machine in the intended mounting direction (in the most sensible direction regarding water penetration, if this is not the same direction).
- The washing process (see picture below) is repeated 11 times and consists of:
  - Washing with 0.3 % alkaline detergent for 2 minutes in 70 °C hot water. (Note: the temperature is measured in the tank, not necessarily at the unit).
  - Rinsing with neutral rinsing aid for 20 seconds.
  - Drying and cooling for 30 minutes in the open air at approx. 20 °C.
- After 11 cycles, the products are left in a ventilated room for 24 hours. The above steps are repeated until a total of 250 cycles has been reached.
- Immediately after washing and after further 24 hours, the products are subjected to a high voltage test in accordance with UM-31-30-072.
- A population sample of the products is opened for water penetration control immediately after the washing test.
  Accept criteria are in accordance with UM-20-30-002.

Options: The following options can be used for the test:

- The units may be weighed prior to and after the washing test to detect water.
- The bubble test may be used to detect any leakages.
- X-ray may be used to detect any leakages.

LINAK washing profile for the “IPX6 Washable DURA” process

LINAK washing profile according to DURA™

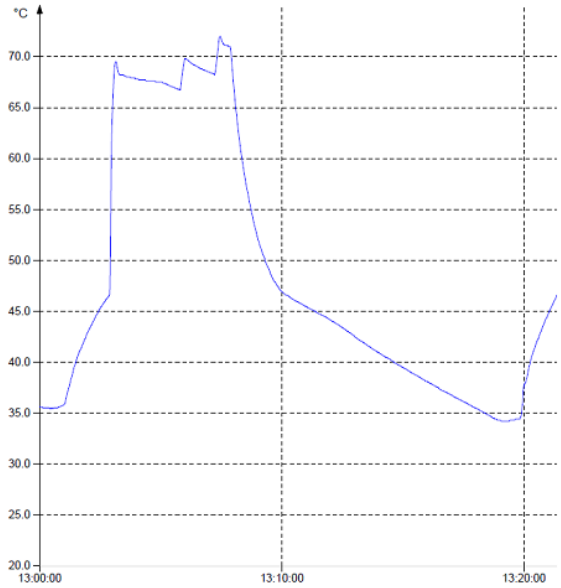

(Note: The temperature is measured at the unit)

LINAK washing machine



Cable wash

Before the washing procedure starts

In order to maintain the flexibility of the cables, it is important that the cable is placed in such a way that the cable’s own weight does not strain the coil during the washing process. This can be done by placing the cable ON the bed or another form of support for the cable. Please see the examples in the picture to the right.

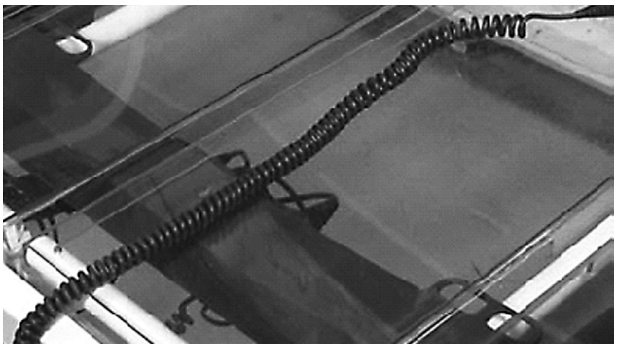

General maintenance

If not otherwise stated in the specific product section.

- LINAK products must be cleaned at regular intervals
- Frequent inspection for malfunction, mechanical damage, wear and cracks. Worn-out parts must be replaced
- Inspection/maintenance intervals are to be recommended by the medical device manufacturer
- LINAK products are closed units and require no internal maintenance
- LINAK products must be IPX6 Washable and IPX6 Washable DURA when cleaning in wash tunnels
- O-rings: When individual parts are replaced in a LINAK IPX6, IPX6 Washable or IPX6 Washable DURA system, the O-rings must be replaced at the same time on all parts. On all products where replaceable cables or fuses have been dismounted or replaced, the O-ring must be replaced, and the O-rings and the receptacle insert must be greased with an acid-free Vaseline.

Maintenance of all LINAK control boxes

- Electronics must be inspected at attachment points, wires, enclosure, and plugs
- Inspect the connections, cables, enclosure, and plugs, and check for correct functioning
- LINAK electronics are maintenance-free (however, this does not apply to lead acid batteries)

Repair and disposal

Only an authorised LINAK® service centre should repair the LINAK actuator systems. Systems to be repaired under warranty must be sent to an authorised LINAK service centre.

In order to avoid the risk of malfunction, all actuator repairs must only be carried out by an authorised LINAK Service shop or repairers, as special tools and parts must be used.

If a system is opened by unauthorised personel there is a risk that it may malfunction at a later date.

LINAK systems or components may be disposed of, possibly by dividing them into different waste groups for recycling or combustion.

We recommend that our product is disassembled as much as possible at the disposal and that you try to recycle it. LINAK systems or components should be disposed of in accordance with the environmental regulations applicable in the respective country.

Insulation class

LINAK® control boxes are available in insulation Class I and insulation Class II.

Output ratings

Nominal values:

On LINAK® control boxes, battery boxes and power supply marking plates, the nominal output voltage at a certain load for a certain product may be stated.

Depending on product and load, this value may vary significantly due to construction.

The expected output voltage may for instance vary depending on product and load within a range from approximately 20 V DC to approximately 50 V DC for a product with a nominal output voltage of 24 V DC due to the construction.

When combining LINAK control boxes, battery boxes and power supplies with other LINAK components, compatibility is ensured. When combining LINAK control boxes, battery boxes or power supplies with third party products, special precautions may be taken. In this case, contact LINAK.

Troubleshooting

Symptom	Possible cause	Action
No motor sound or movement of piston rod	- The actuator is not connnected to the control box - Blown fuse in the control box - Cable damaged	- Connect the actuator to the control box - Fuse must be changed - Send actuator for repair
Excessive electricity consumption		- Send actuator for repair
Motor runs but spindle does not move	- Gear wheel or spindle damaged	- Send actuator for repair
Actuator cannot lift full load	- Clutch is worn - Motor is damaged	- Send actuator for repair
Motor sound but no movement of piston rod		- Send actuator for repair
No signal from Reed or Hall switch		- Send actuator for repair
Motor runs and quick release does not function or is noisy	- Declutching arm turns less than approx. 75 °C	- Adjust cable
Piston rod will only move inwards and not outwards	- Safety nut has operated	- Send actuator for repair
	- Not connected to mains	- Connect to mains
Power indicator does not light up	- The fuse has blown	- Replace fuse, if the system is prepared for external fuse replacement, or send the system for repair
	- Defective power cable	- On control boxes with exchangeable power cable, change the cable. - On control boxes with fixed cable, send it for repair
	- Control box defective	- Send control box for repair
	- Actuator plug not pushed into control box properly	- Push actuator plug properly into control box
Power indicator lights up, but actuator does not run	- Actuator defective	- Replace actuator - Defective control box - Replace the control box
Control box relays are clicking	- Control box defective	- Send control box for repair
Power indicator lights up, but actuator does not run	- Hand control defective	- Send hand control for repair
No relay noise is heard from control box Not valid for CB20/CB6S OBF/CB16 OBF	- Battery completely flat	- Charge battery
Control box completely dead on battery and no relay clicking	- Battery defective	- Replace battery
	- Actuator plug not properly pushed into control box	- Push actuator plug properly into control box
Actuator does not run on battery, but relay clicking can be heard	- Actuator defective	- Replace actuator
	- Control box defective	- Replace control box
	- Hand control defective	- Send hand control for repair
	- Control box defective	- Send control box for repair
Control box okay apart from one direction on one channel		

CA20



Developed primarily for the healthcare sector, the analogue control box CA20 is a compact solution optimised for flexible integration and mounting.

Usage

Operation temperature:	+5 °C to +40 °C
Storage temperature:	-10 °C to +50 °C
Relative humidity:	20% to 80% – non-condensing
Atmospheric pressure:	700 to 1060 hPa
Meters above sea level:	Max. 3000 meters
Duty cycle:	10% - 2/18 min. on/off continuous use at 230 V. Maximum power is 90 W for 80 seconds and 45 W for 40 seconds at 25 °C
Approvals:	IEC60601-1 (TÜV)

LED indication



CA20 is equipped with a green LED for indication of mains power connected.

When the CA20 is connected to mains, the LED lights green.

Screw mounting

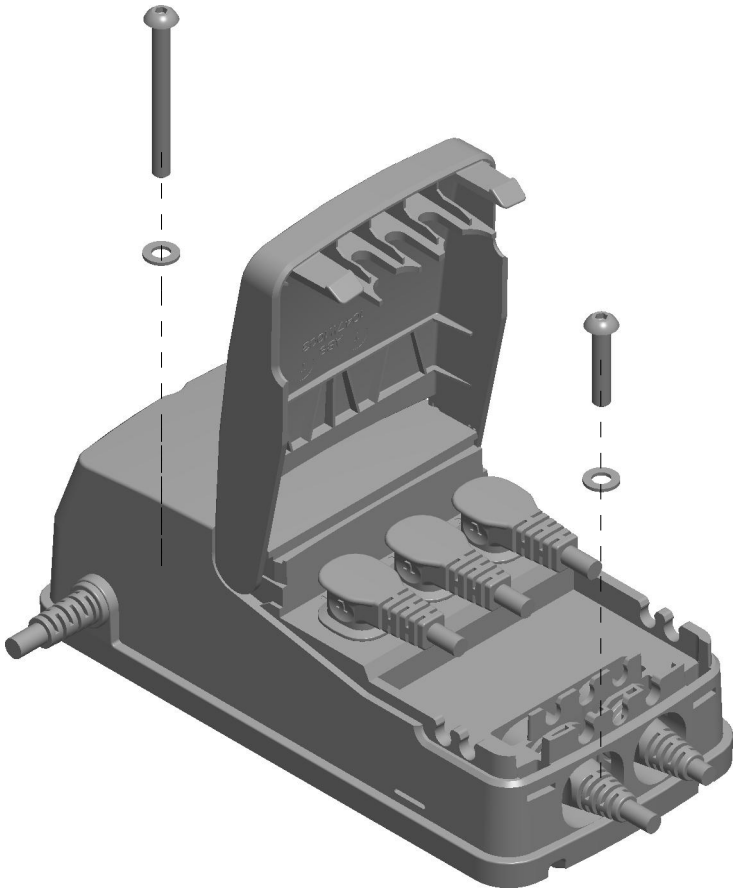

Screw:
ISO 7380-1 - M5X25 x 1PCS
ISO 7380-1 - M5X50 x 1PCS

Washer:
ISO 7089 - M5 x 2PCS
(d1=∅ 5.3 mm, d2=∅ 10 mm, h=1 mm)

Screw Torque:

Drawing no.: 1047W4010

Mounting

The CA20 fits with the actuator LA27, however, mounting on the bed frame is also possible.

CA20 - mounted with LA27

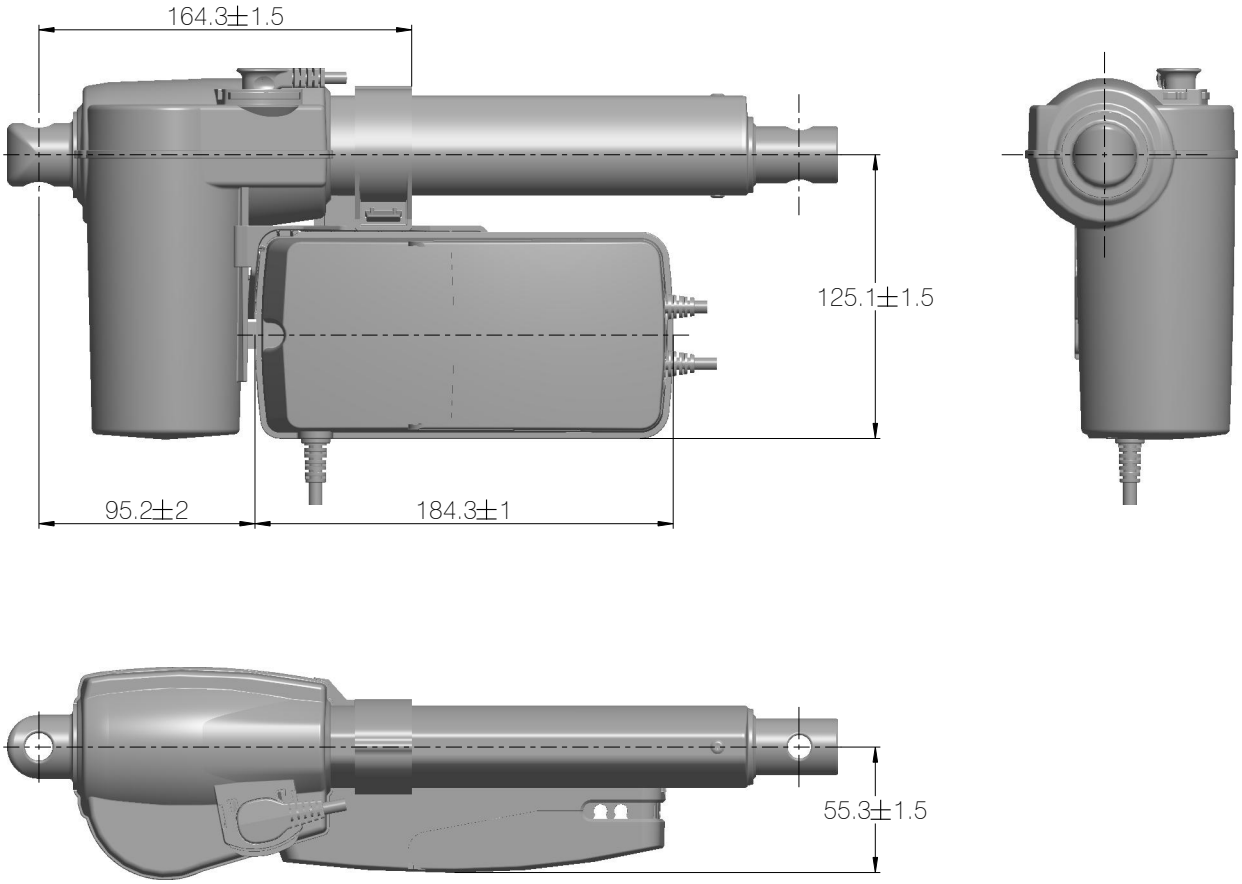

Drawing no.: 1047W4009

For side-mounting with LA27

Article No. 1047W1009

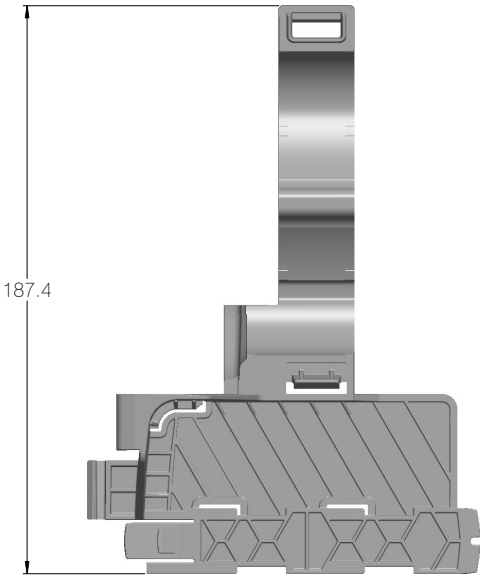

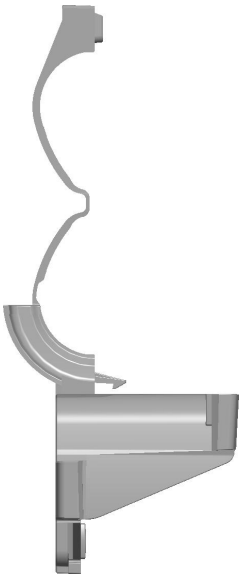

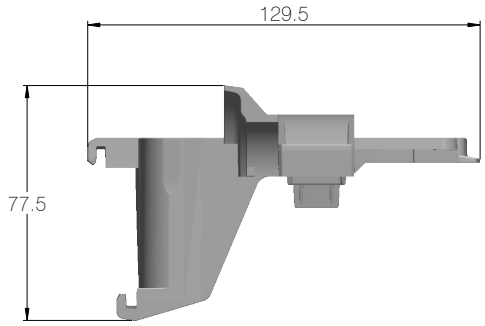

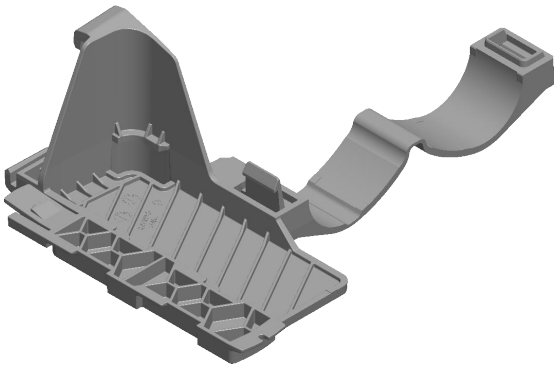

Open

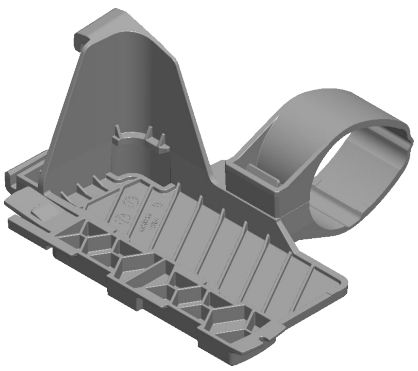

Wrapped

Drawing No: 10475W4008

CA20 - mounted on frame

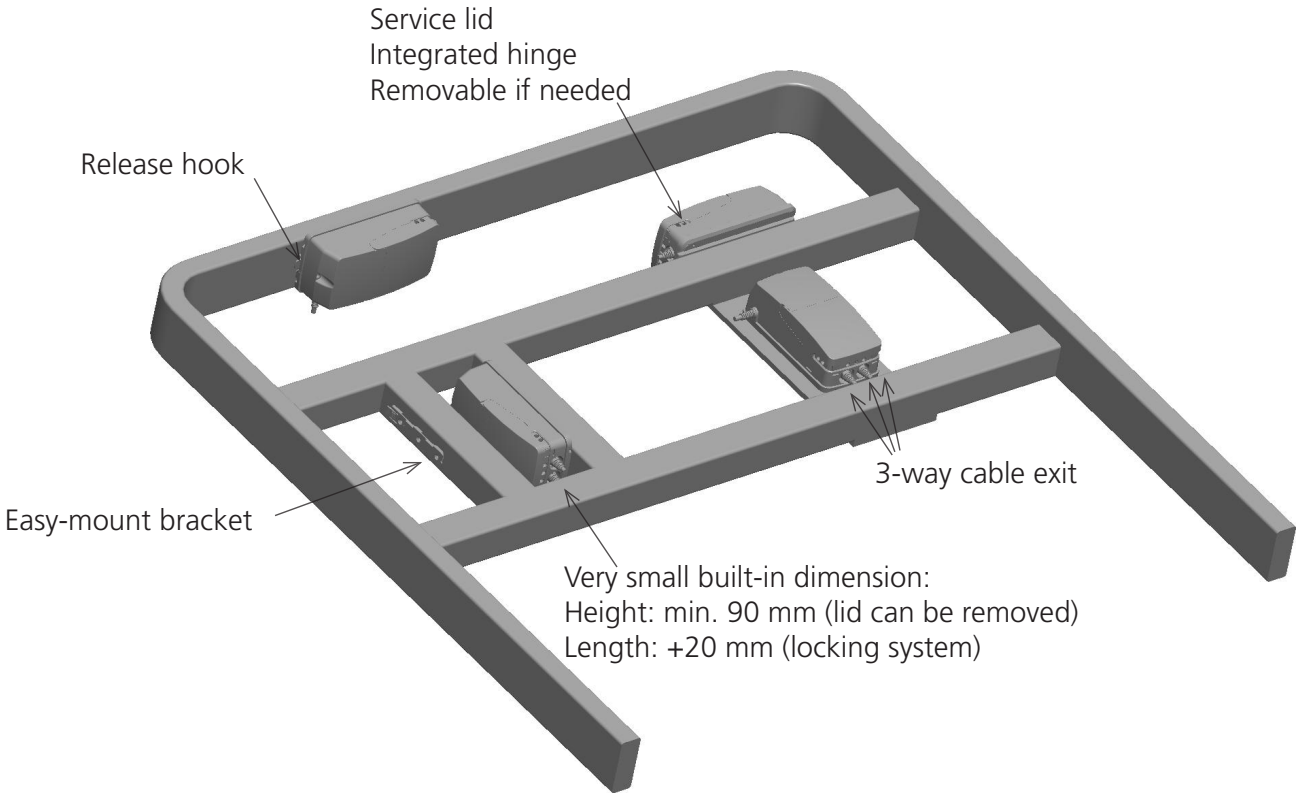

Drawing No: 10475W4011

Mounting bracket (frame flat)

Article No. 1015W1001

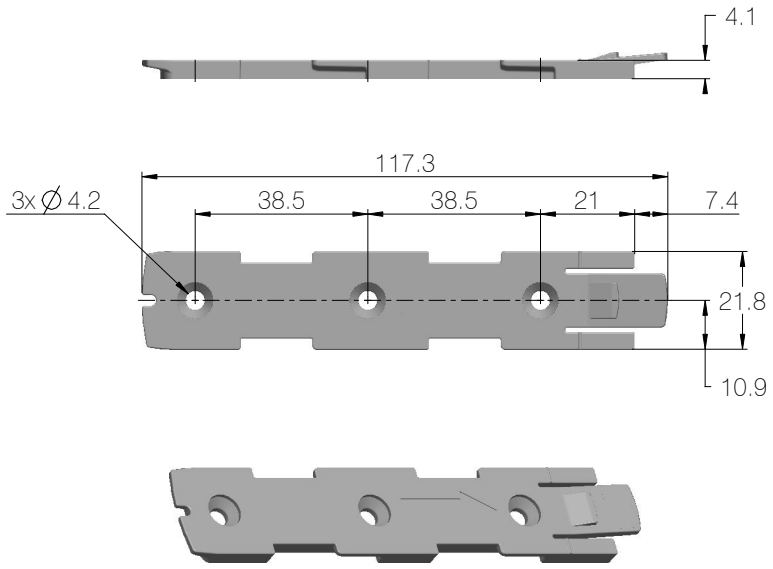

Drawing No.: 1015W4001

Mounting bracket (frame flat) w/M4 nuts

Article No. 1015W9009

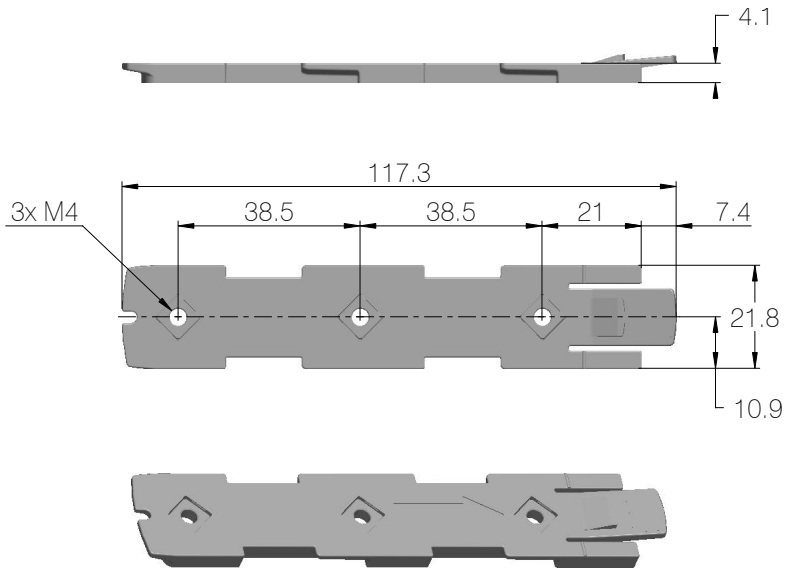

Drawing No.: 1015W4009

It is recommended to mount the CA20 in a position that allows water to escape.

Recommended torque: 0.6 Nm +/-0.1

The bracket can be mounted to the bed frame or any other application by means of one of the following mounting procedures:

1. M6 nut to be placed in bracket and fixed with M6 bolt from the rear side.
2. M5 machine screw with flat washer to be fixed through bracket with nut on the rear side.
3. Self-tapping screw to be placed through bracket and onto the frame.

Mounting of cables and cable lock

Cable lock for actuator:

The control box CA20 has a uniquely designed cable lid. The lid also works as an integrated cable lock when closed.

1) Mount cable plugs in control box

2) Close lid until lock snaps into place (see arrows)

To allow free access to the cables, the lid has a rest position when completely opened.

It is possible to remove the lid by lifting it a few degrees and pulling it away from the housing under tight mounting conditions.

Cable management:

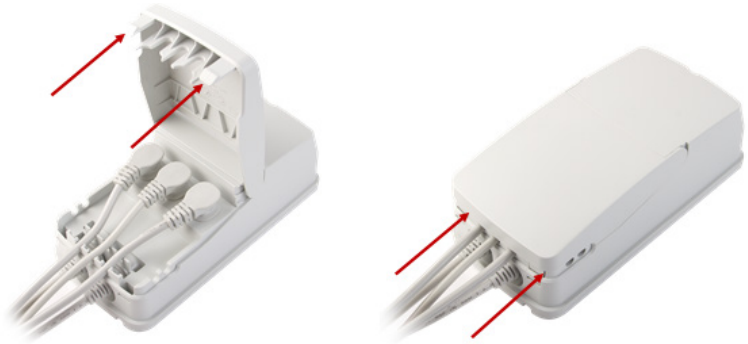

Cable lock control port and ES port:



Recommendations

- Push plugs fully into correct sockets and make sure the the plugs are completely inserted.
- Mount the control box cover and close it until locked in place.
- Take special precautions concerning third-party interfacing. Please contact LINAK for further information.

Warnings

- Pressing multiple keys simultaneously might cause an unintended trend or anti-trend movement.
- The output power can only keep 60% of 90 W if the mains input voltage has a dramatic decrease.
- Note that the CA20 common current limit is 5 A and may cause overload on certain actuator types.

CA30/CA40



The control boxes CA30 and CA40 are developed as part of a new control box platform for the care and rehab industry. The control boxes can be mounted separately on the application by means of unique slide-on brackets, but also on several actuator models using a specially designed actuator bracket.

Usage

Operation temperature	+5 °C to +40 °C
Storage temperature	-10 °C to +50 °C
Relative humidity	20% - 80% - non-condensing
Atmospheric pressure	700 to 1060 hPa
Meters above sea level	Max. 3000 meters
Duty cycle:	10 % - 2/18 min. on/off continuos use. Maximum power is 120 W for 80 seconds and 60 W for 40 seconds at 25° C.

Mains supply grid should be limited to the highest prospective short circuit current of 1500 A.

Demands to mains supply safety for the application in accordance with IEC 60601-1 ed. 3.2, § 8.11.5

Approvals	- IEC60601-1 - ANSI/AAMI ES60601-1 - CAN/CSA-22.2 No 60601-1 DENAN Technical Requirements Ministerial Ordinance Appendix 8, 10

LED indicator



CA30-CA40 is equipped with a three-colour LED for indication of mains or battery operation.

Connected to MAINS	
LED colour	**Indication of operation**
Green	**On mains, not activated by hand or foot control.** The system is working ok and is ready for normal operation
Yellow	**On mains, not activated by hand or foot control.** The system is defective and should not be operated.
Yellow	**On mains, activated by hand or foot control.** The system is working.

Not connected to mains but with BATTERY back-up	
LED colour	**Indication of operation**
Orange	**On battery, activated by hand or foot control.** The system is working
No LED	**On battery, not activated by hand or foot control.** or CA30-CA40 not connected to mains

Mounting

For mounting on a LINAK actuator (LA27, LA31 or LA40), a mounting bracket is required.

Dimensions – mounted with LA40

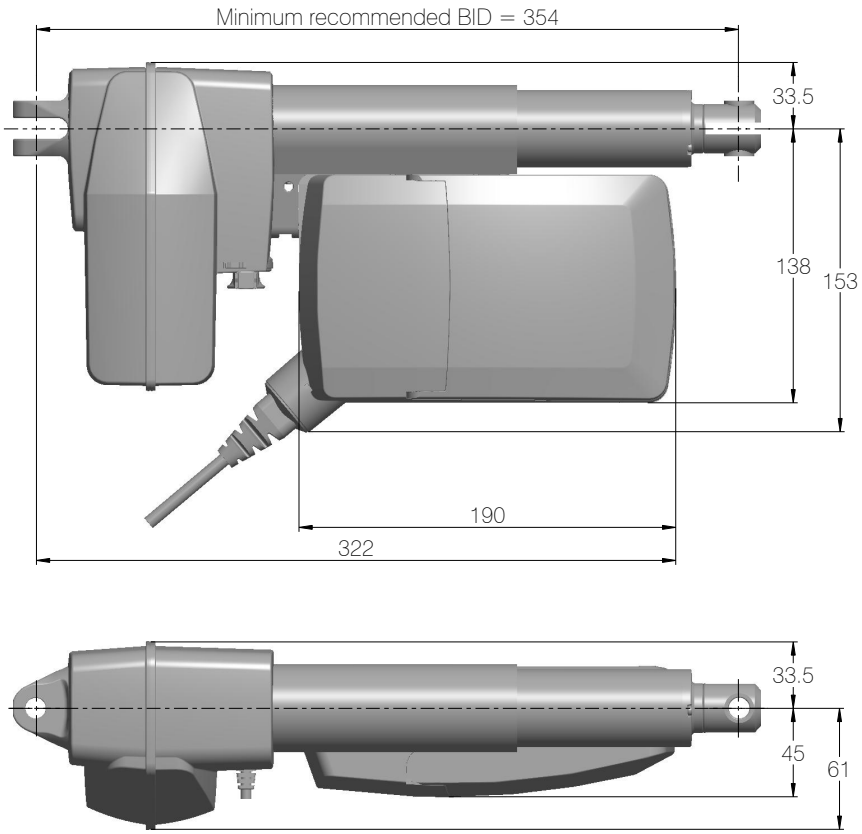



Min. built-in dimensions	
LA27	314
LA31	333
LA40	354

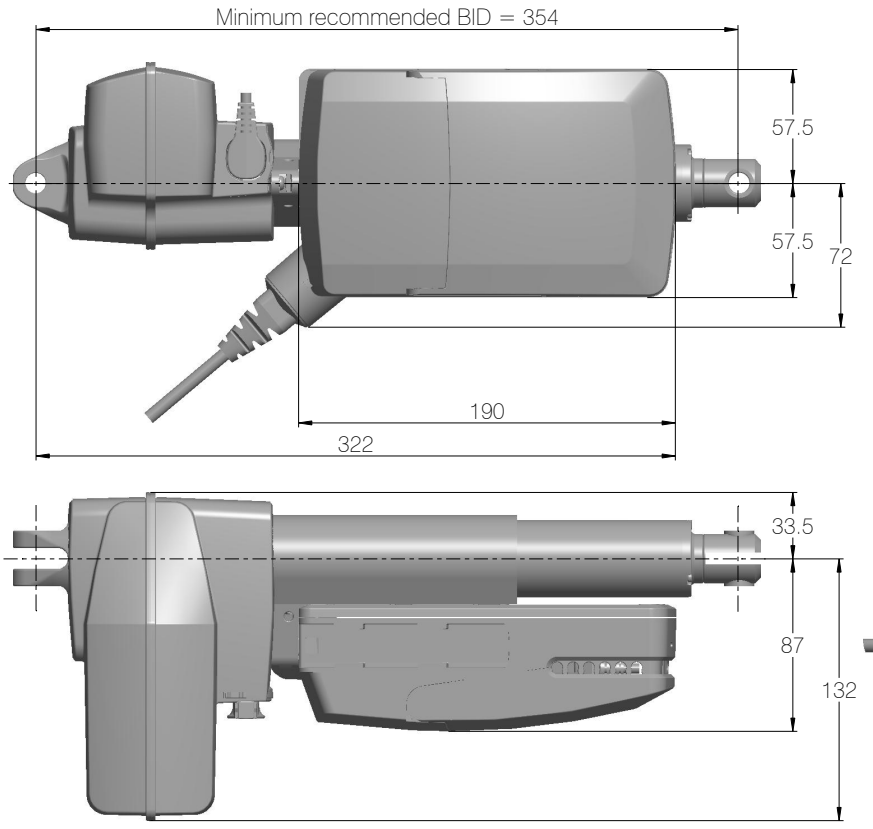



Drawing no.: 1013W4013

Dimensions – mounted with LA31

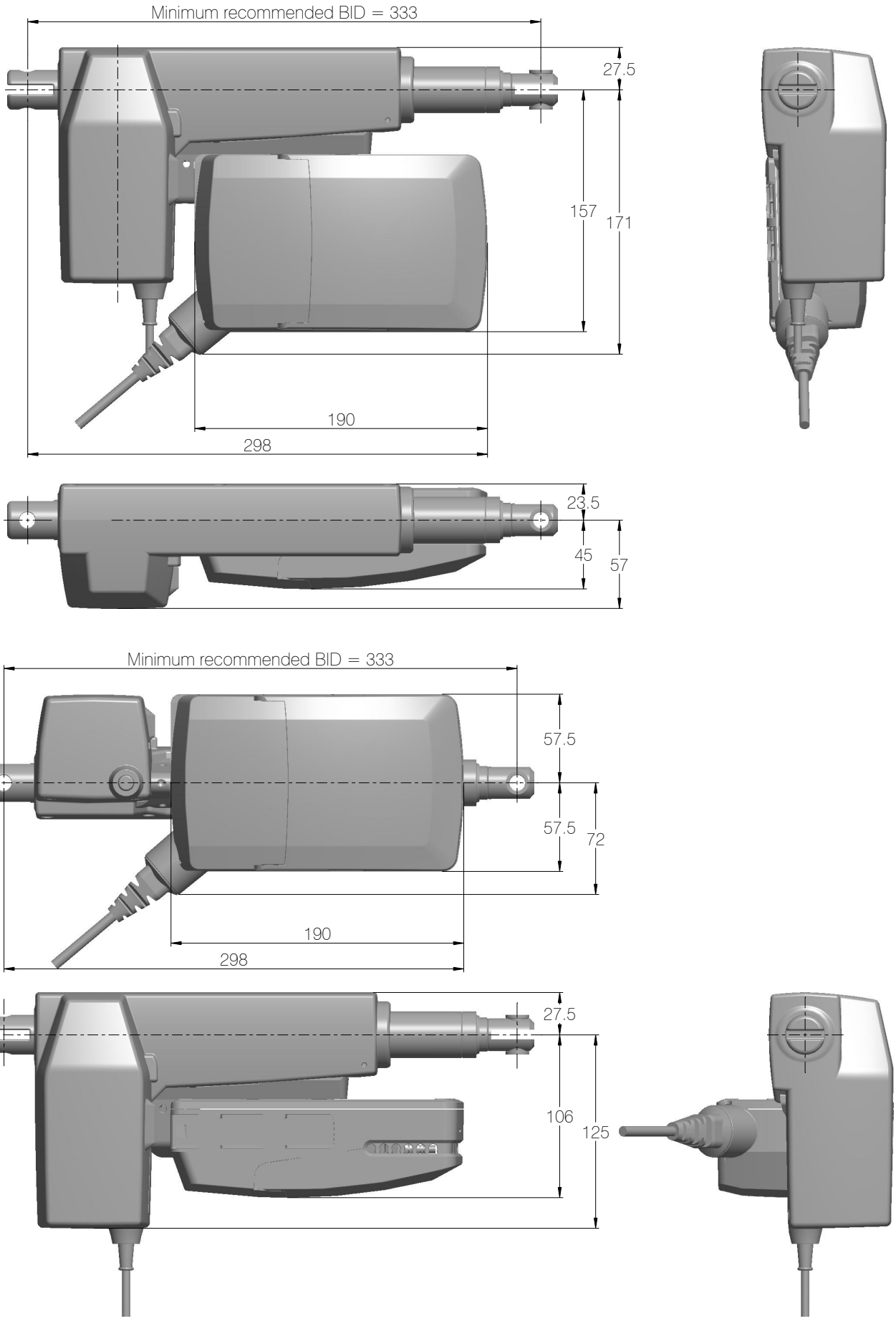

Drawing no.: 1015W4012

Dimensions – mounted with LA27

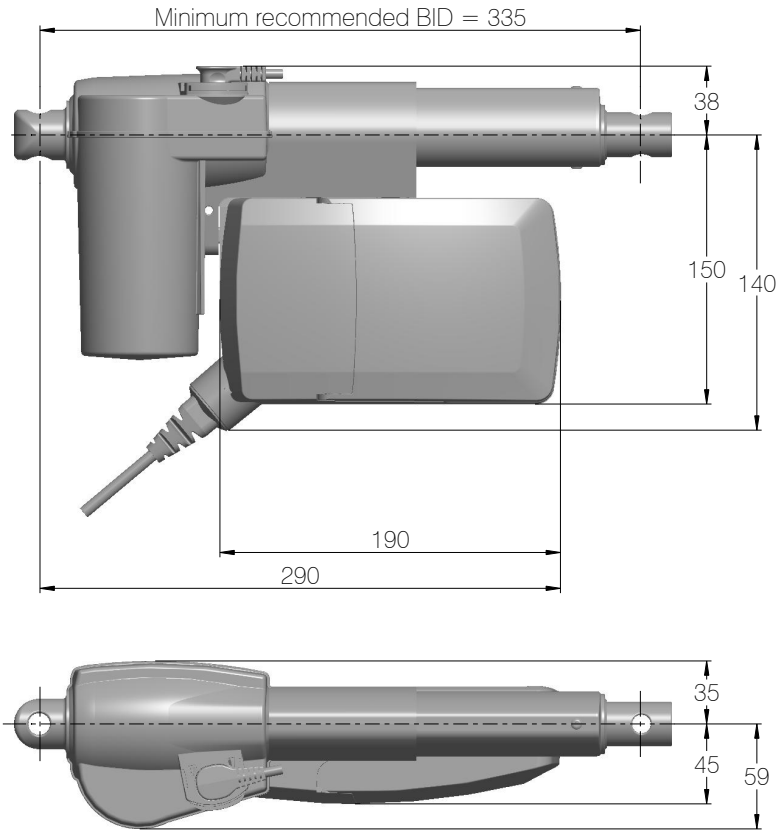

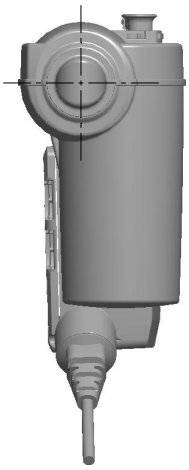

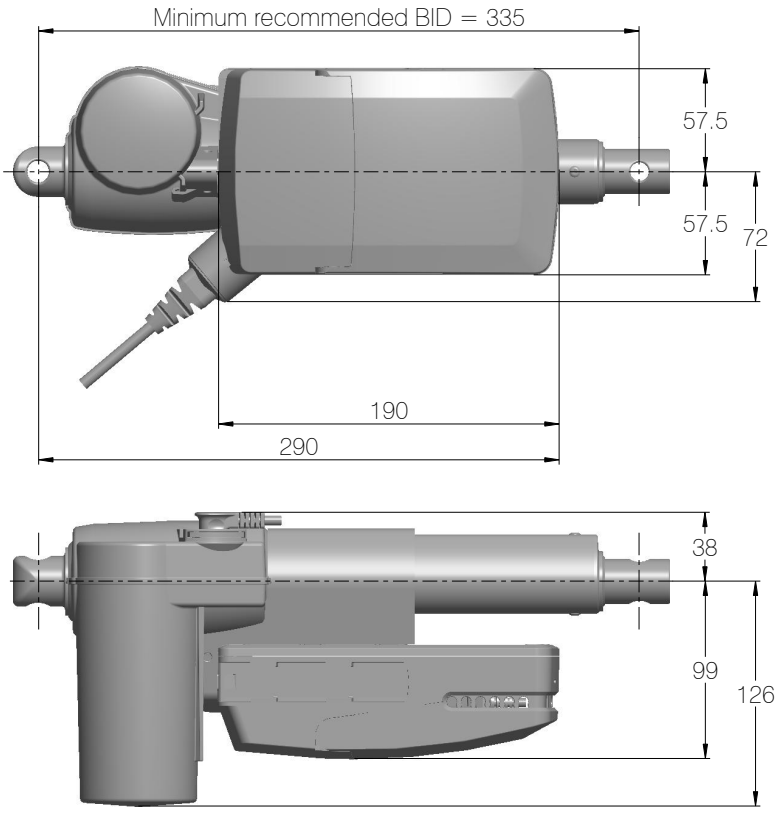

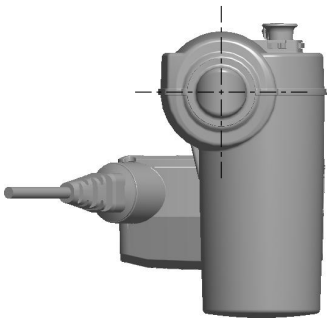

Drawing No.: 1015W4011

Mounting brackets

For mounting with LA40

Article No.: 1015W1002

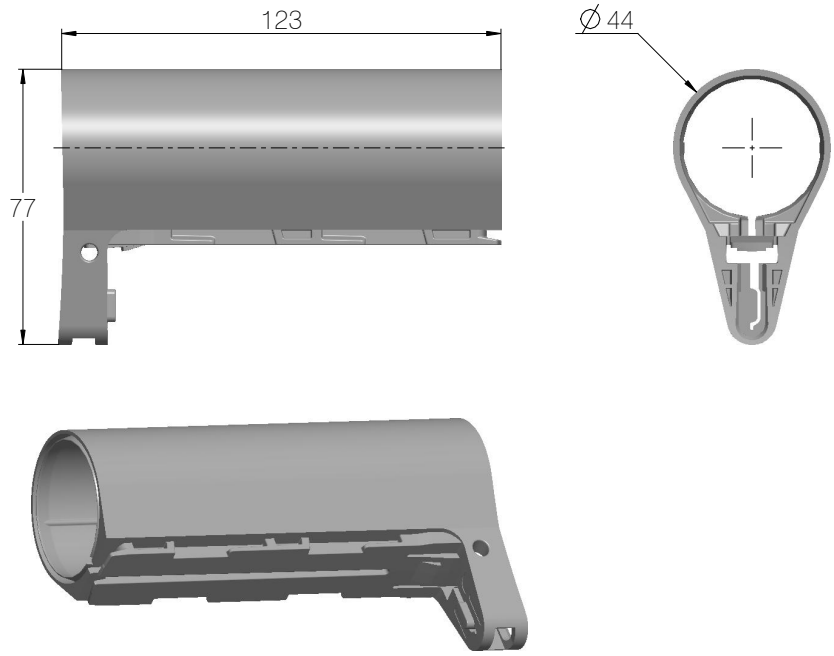

Drawing No.: 1015W4002

For mounting with LA31

Article No.: 1015W1004

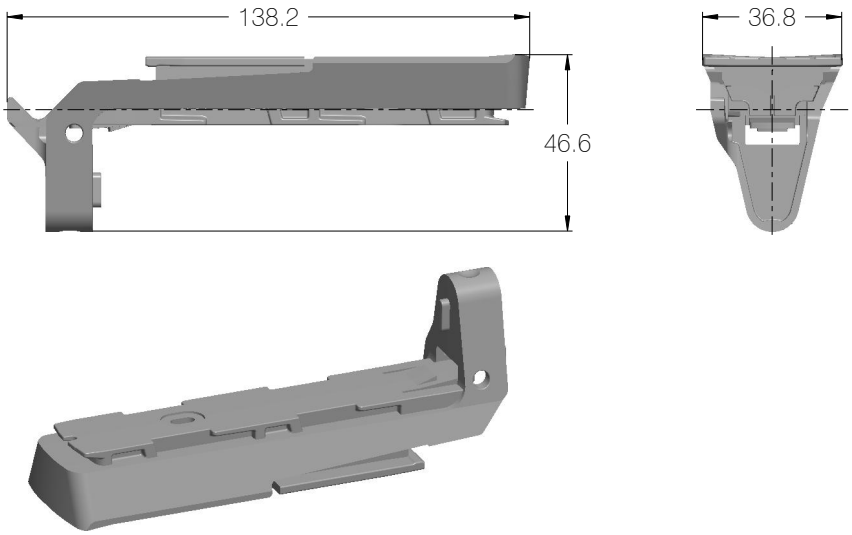

Drawing No.: 1015W4004

For mounting with LA27

Article No.: 1015W9003

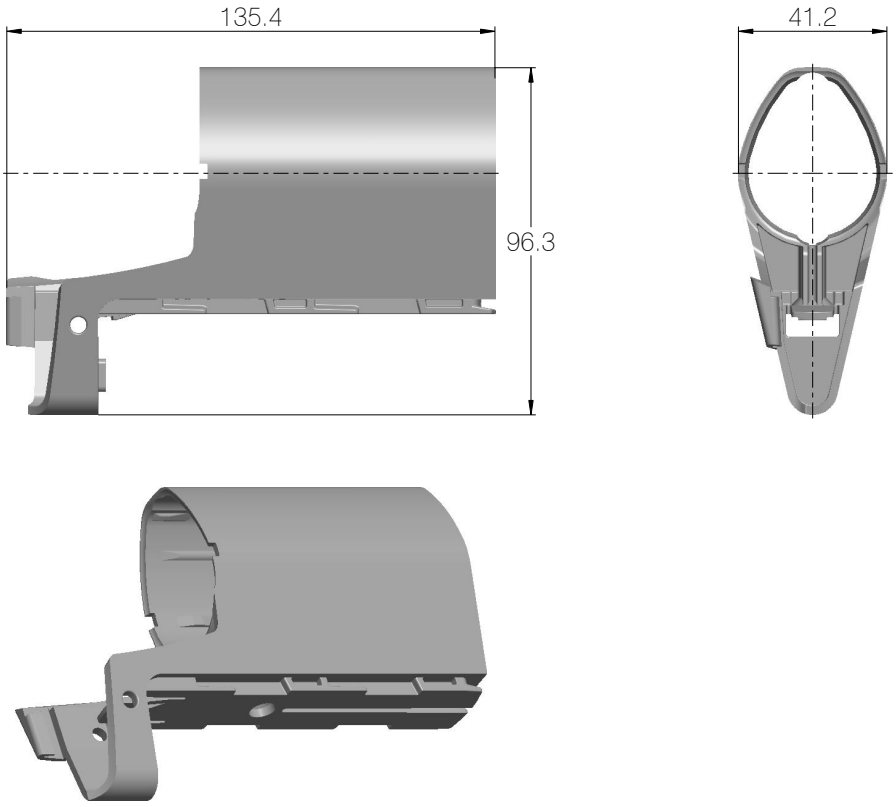

Drawing No: 1015W4003

The adapter 1015W9003 includes a screw that is halfway mounted, thus everything as one part.

Screw head torx size: T15
Screw torque: 1.2 ± 0.2 Nm

Mounting bracket (frame flat)

Article No. 1015W1001

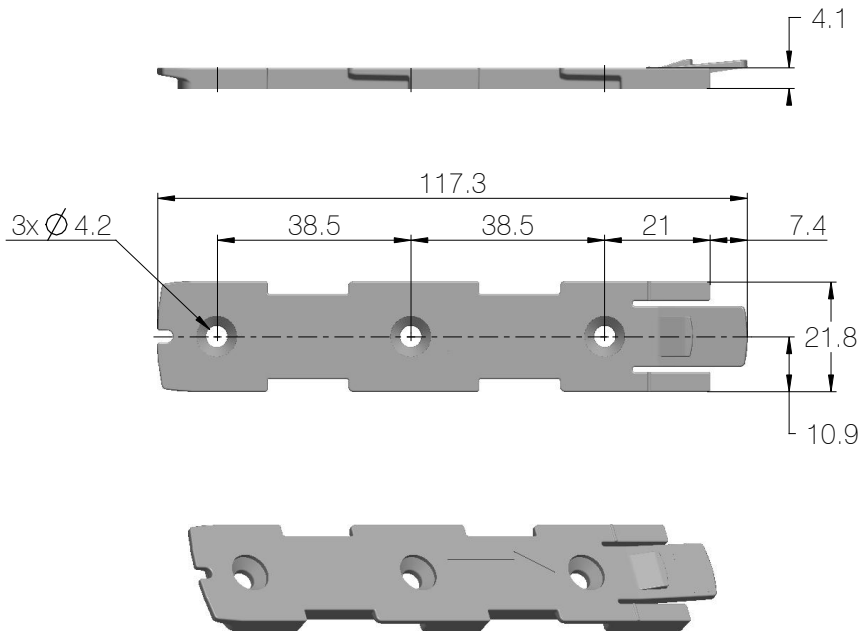

Drawing No.: 1015W4001

Mounting bracket (frame flat) w/M4 nuts

Article No. 1015W9009

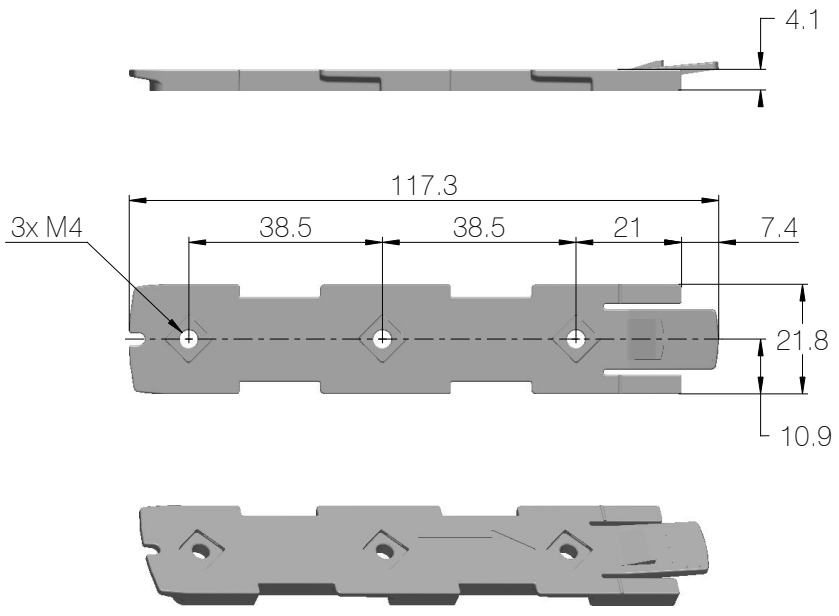

Drawing No.: 1015W4009

Mounted on frame

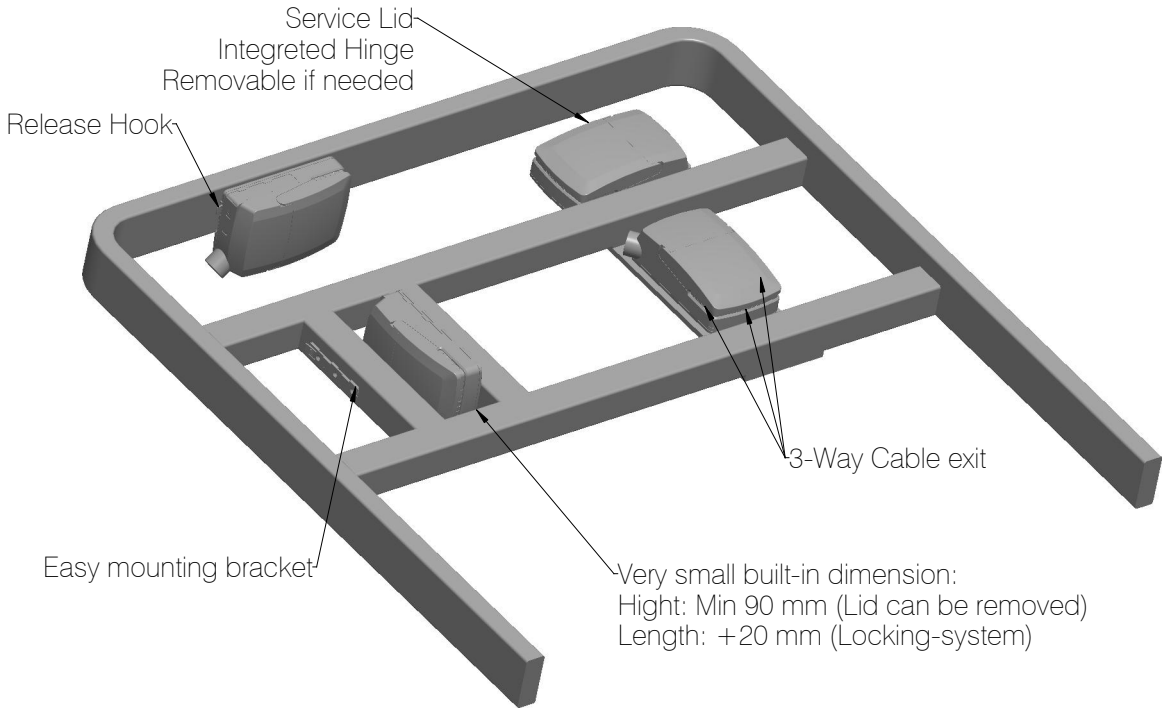

Drawing No.: 1013W4008

Mounting instructions

When mounting the control box onto the actuator (1)

Simply slide on the bracket until you hear a clear click (2)

Slide on the control box until you hear a click and the box is mounted (3)

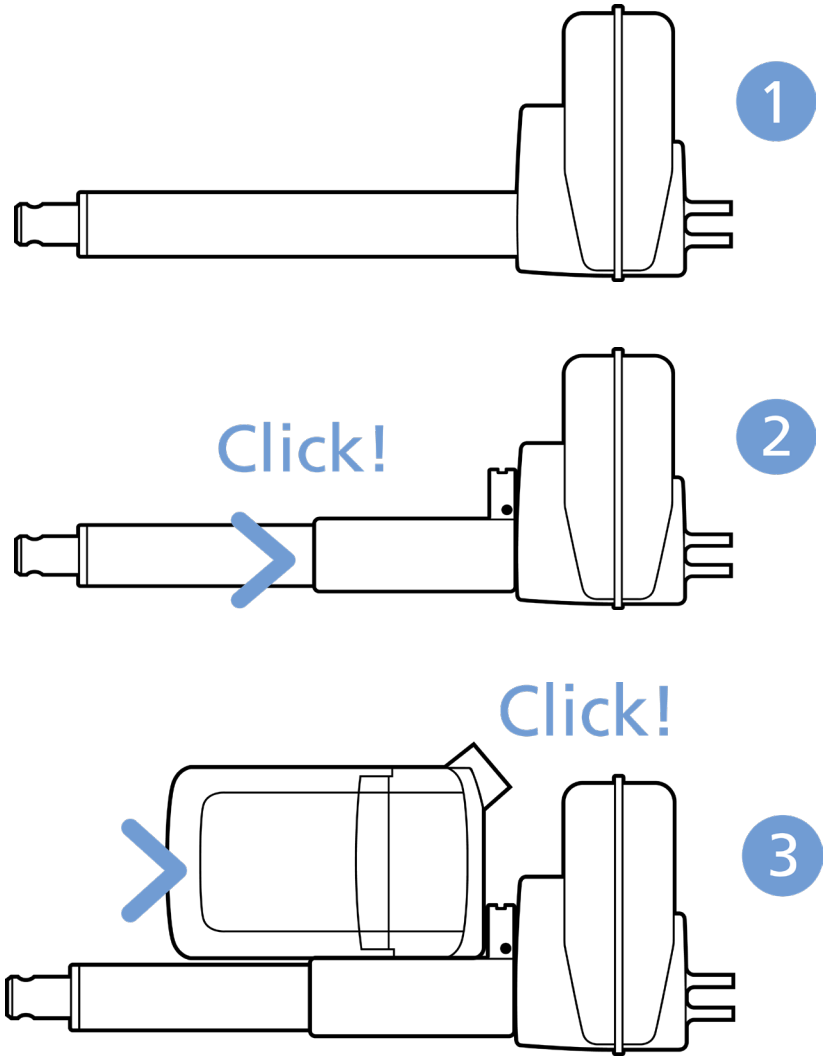

It is recommended to mount the CA30-CA40 in a position that allows water to escape.

Recommended torque: 0.6 Nm +/-0.1

The bracket can be mounted to the bed frame or any other application by following one of the following mounting procedures:

1. M6 nut to be placed in bracket and fixed with M6 bolt from the rear side
2. M5 machine screw with flat washer to be fixed through bracket with nut on the rear side
3. Self-tapping screw to be placed through bracket and onto the frame

Mounting of cables and cable lock

The control boxes CA30-CA40 have a uniquely designed cable lid. The lid also works as an integrated cable lock when closed.

1. Mount cable plugs in control box
2. Close lid until lock snaps into place (see arrows)

To allow free access to the cables, the lid has a rest position when completely opened.

It is possible to remove the lid by lifting it a few degrees and pulling it away from the housing under tight mounting conditions.

Cable management

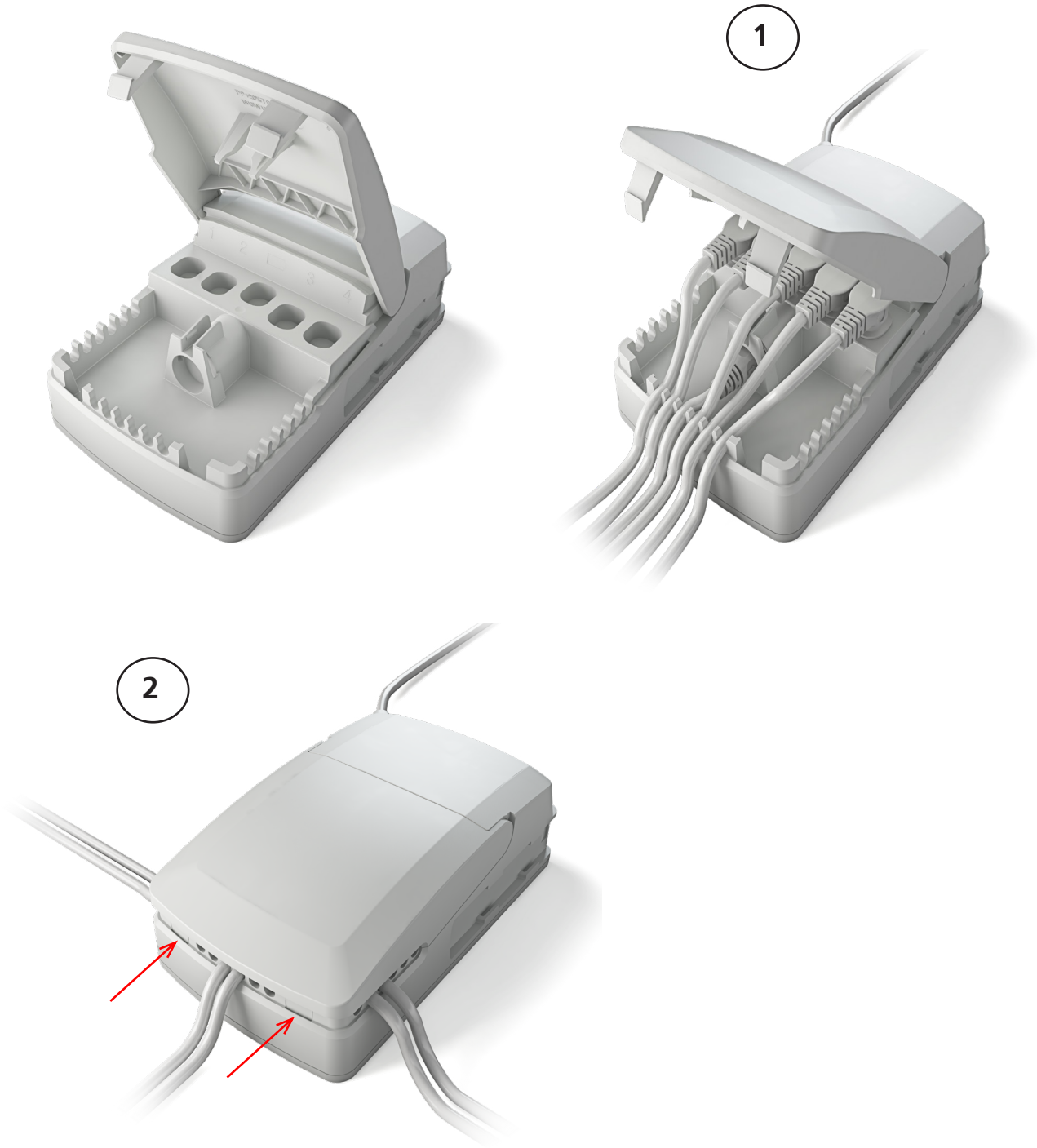

Battery Operation

CA30 and CA40 are only compatible with batteries with built-in charger, BA19 or BA16.

EOP - Electronic Overload Protection

Remark - common/individual current measurement

As default, the current cut-off is set to 8 A per channel. The total current cut-off default setting is 8 A. If more channels run at the same time, 8 A are distributed equally.

Motor cable

Always use 6-wire cables.

Please note that angled motor cable plugs are required.

Recommendations

- Note that the common current limit on CA30-CA40 is 8 A and may cause overload on certain actuator types.
- Be aware that the channel configuration has been changed compared to existing analogue control boxes.
- To avoid unintended movement like trend or anti-trend, LINAK recommends the application manufacturer to instruct the end user to avoid that multiple keys are pressed simultaneously.
- Push plugs fully into correct sockets and make sure that the plugs are completely inserted.
- Mount the control box lid and close it until locked in place.

Warnings

- Due to the half-bridge technology, pressing multiple keys simultaneously might cause an unintended trend or antitrend movement (application environment 4).

CA63



The LINAK control box CA63 with analogue input offers a consolidated range of unprecedented features – all utilising standardised technology, interfaces and compatibility.

Usage

Operation temperature:	+5 °C to +40 °C
Storage temperature:	-10 °C to +50 °C
Relative humidity:	20% to 80% - non-condensing
Atmospheric pressure:	700 to 1060 hPa (3000 m)
Meters above sea level:	Max. 3000 meters
Duty cycle:	10 % - 2/18 min. on/off continuous use Maximum power is 200 W for 80 seconds and 100 W for 40 seconds at 25 °C

Mains supply grid should be limited to the highest prospective short circuit current of 1500 A.

Demands to mains supply safety for the application in accordance with IEC 60601-1 ed. 3.2, § 8.11.5

Approvals:	IEC60601-1 edition 3.1 ANSI/AAMI ES60601-1:2005/(R) 2012 CSA CAN/CSA-C22.2 NO. 60601-1:14 IPX6 Washable in accordance with IEC60601-2-52

LED indicator



CA63 is equipped with a green LED for indication of mains power connected. When the CA63 is connected to mains, the LED is green. Connected only to battery, the LED is off.

Connected to MAINS	
LED colour	**Indication of operation**
Green	**On mains, not activated by hand or foot control.** The system is working ok and is ready for normal operation
Yellow	**On mains, not activated by hand or foot control.** The system is defective and should not be operated.
Yellow	**On mains, activated by hand or foot control.** The system is working.

Not connected to mains but with BATTERY back-up	
LED colour	**Indication of operation**
Orange	**On battery, activated by hand or foot control.** The system is working
No LED	**On battery, not activated by hand or foot control.** or CA63 not connected to mains

Acoustic signal functionality

The buzzer will make a warning, when a button on the hand control is pressed, and the battery state of charge is low. The buzzer can also be activated by the control box to signal other conditions. This must be specified in the control box software.

Mounting

For mounting on a LINAK actuator (LA27, LA31 or LA40), a mounting bracket is required.

Dimensions – mounted with LA40

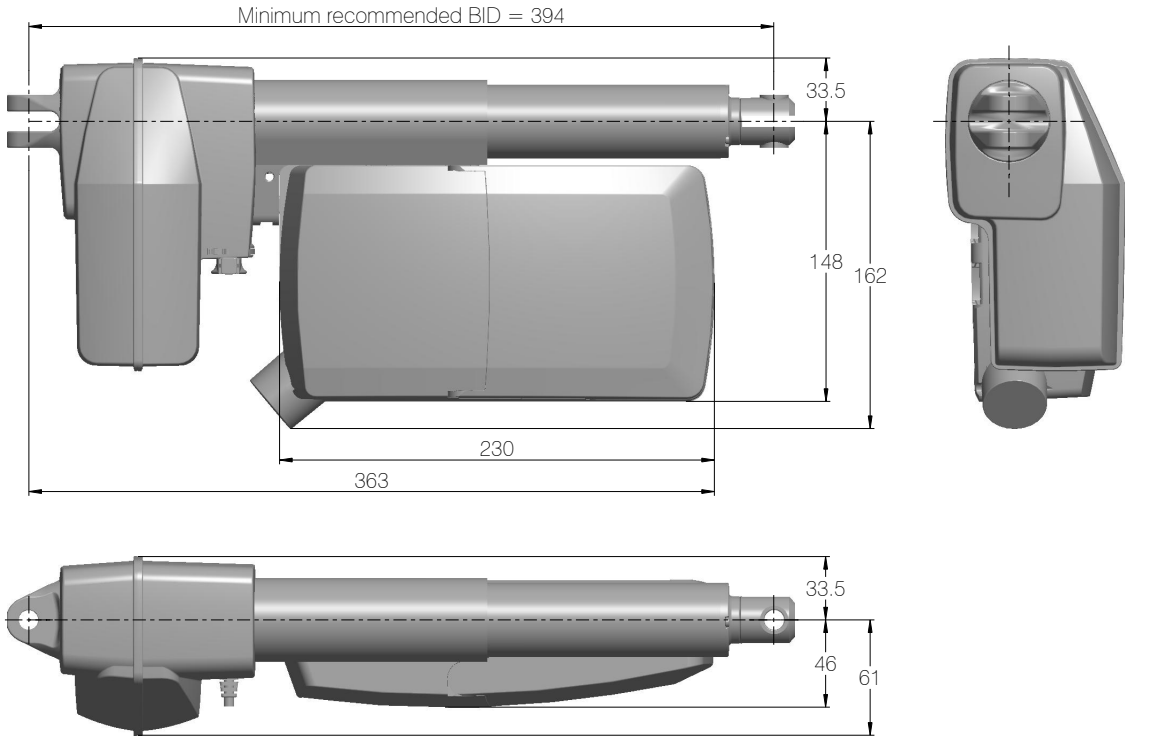

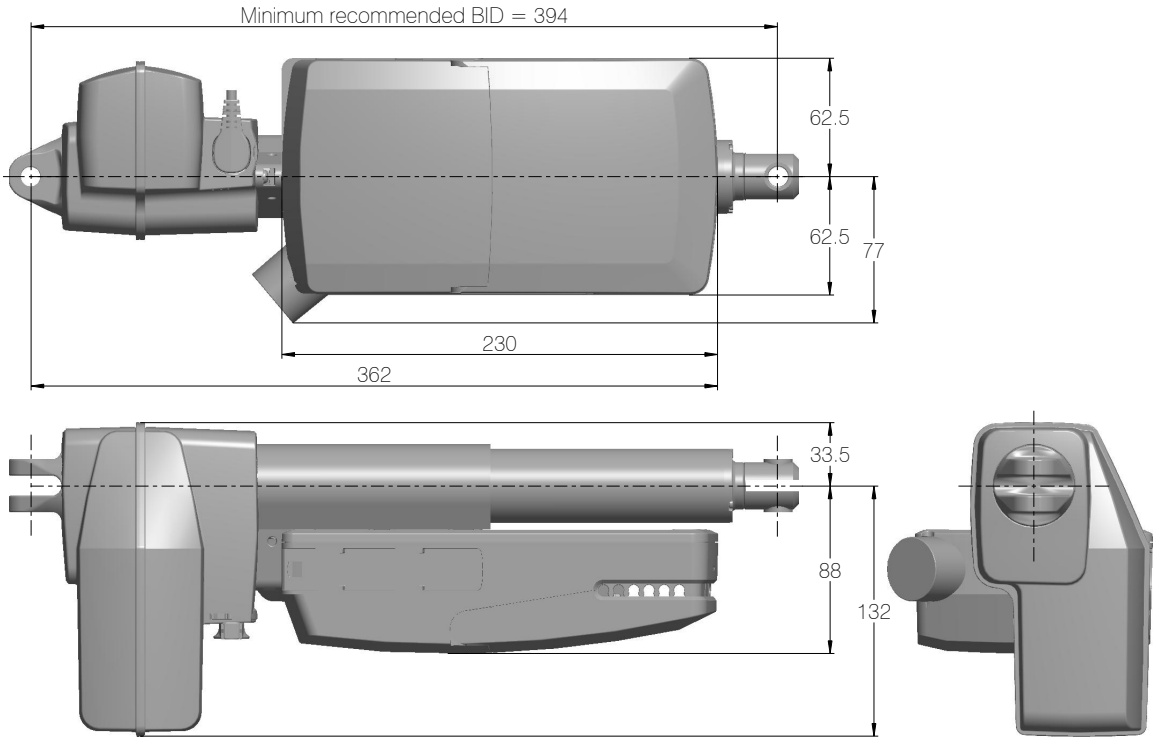

Drawing No.: 1015W4018

Dimensions – mounted with LA31

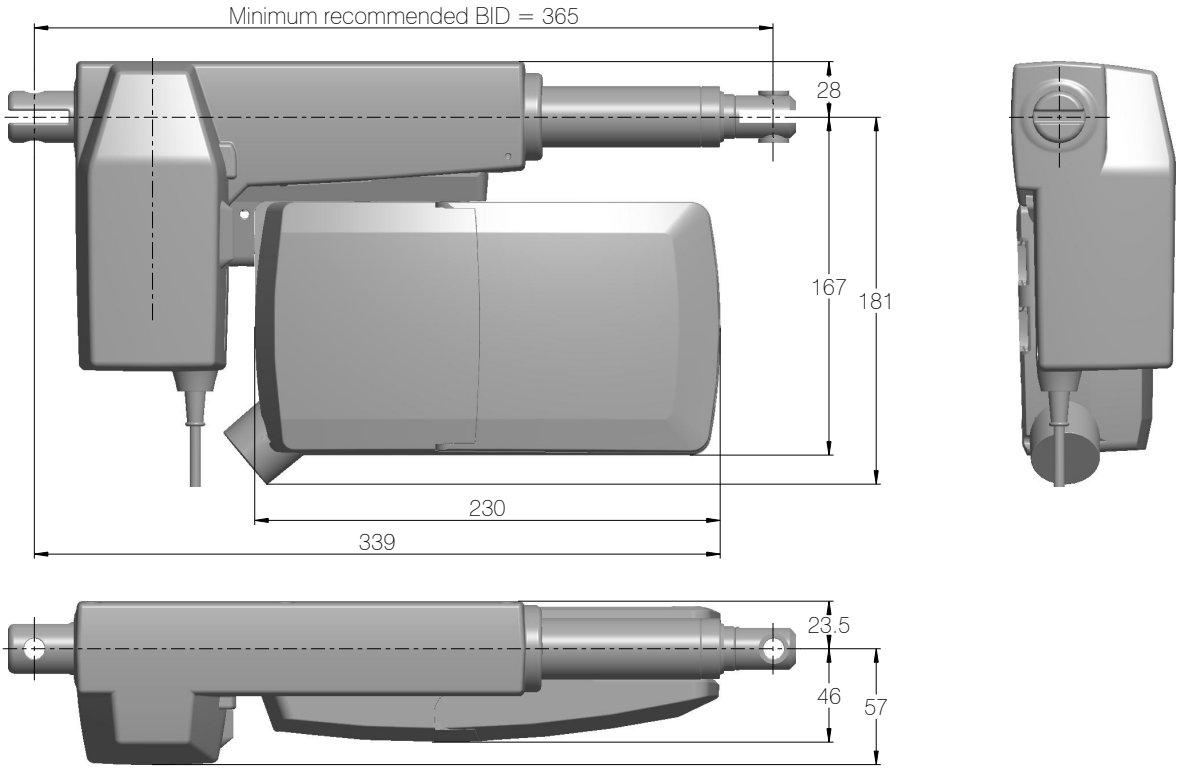

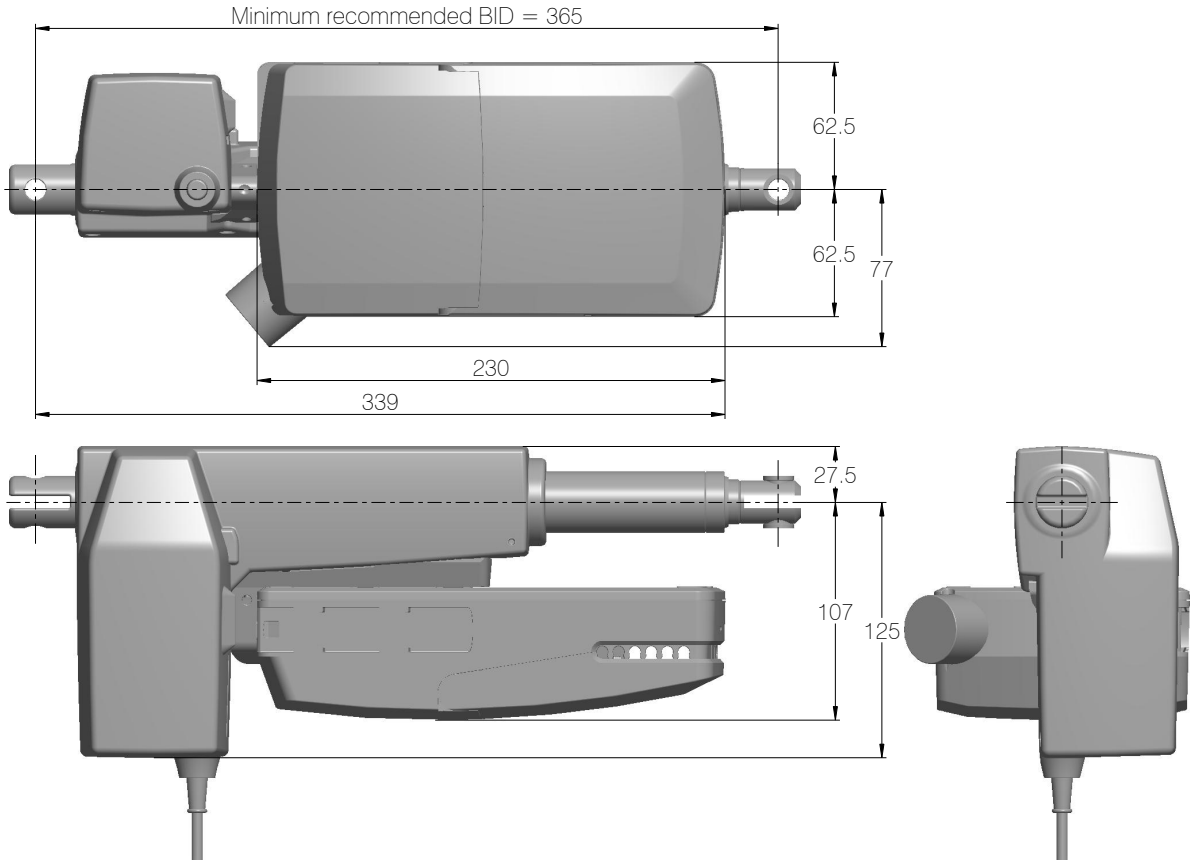

Drawing No.: 1015W4017

Dimensions – mounted with LA27

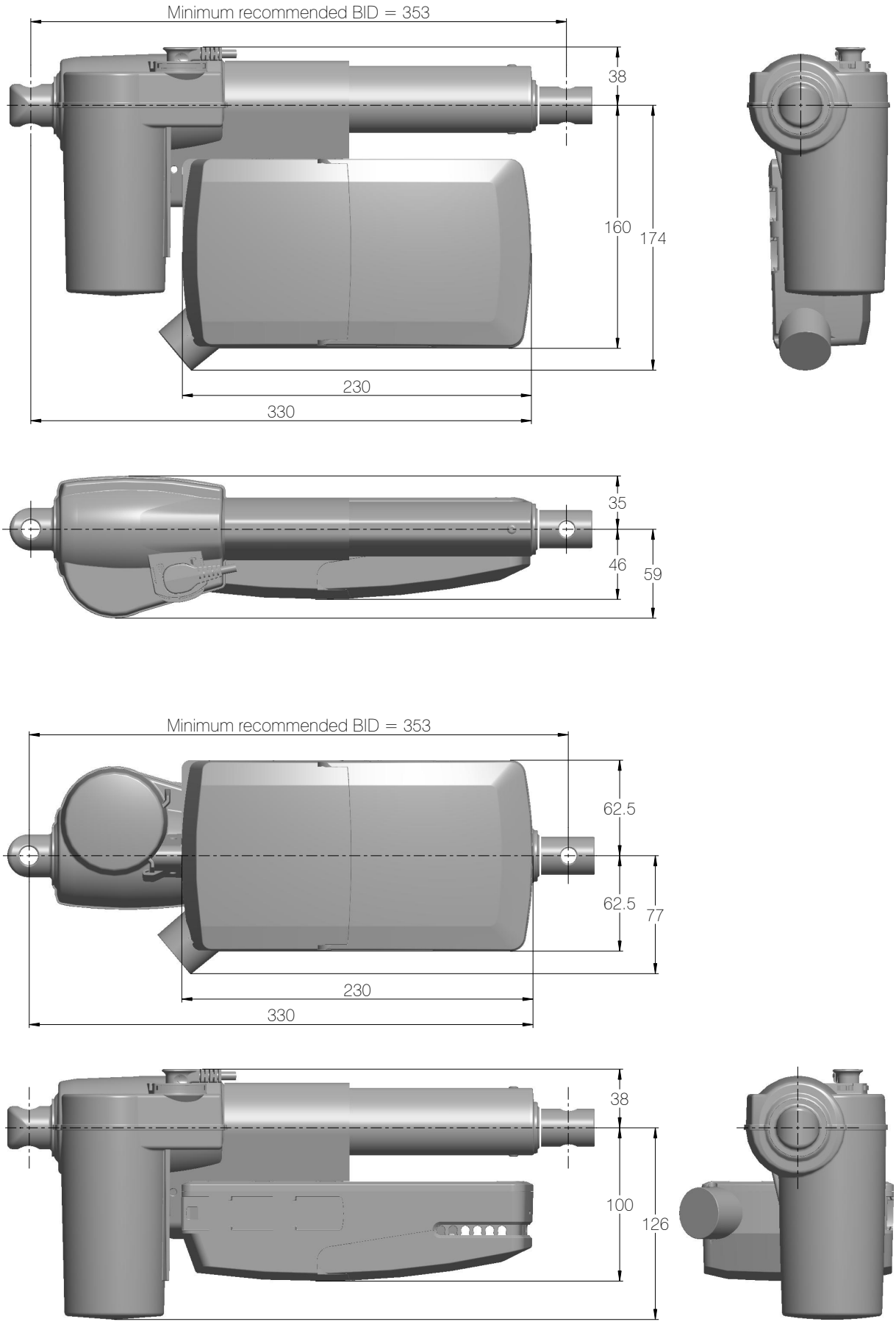

Drawing No.: 1015W4016

Mounting brackets

For mounting with LA40

Article No.: 1015W1002

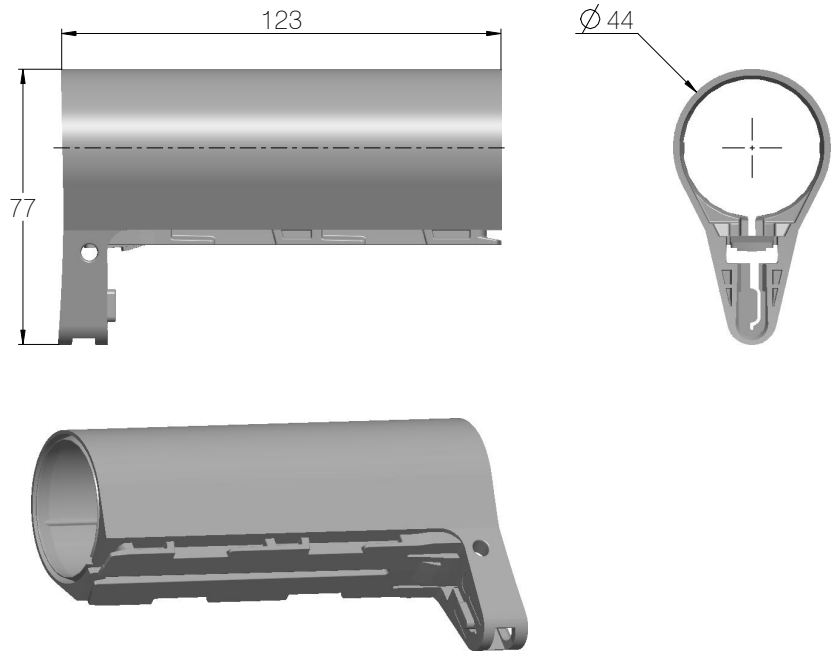

Drawing No.: 1015W4002

For mounting with LA31

Article No.: 1015W1004

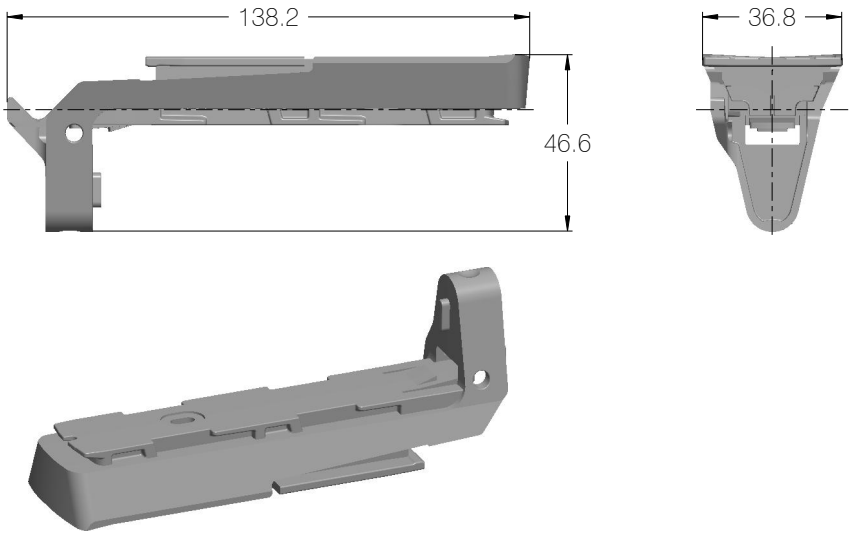

Drawing No.: 1015W4004

For mounting with LA27

Article No.: 1015W9003

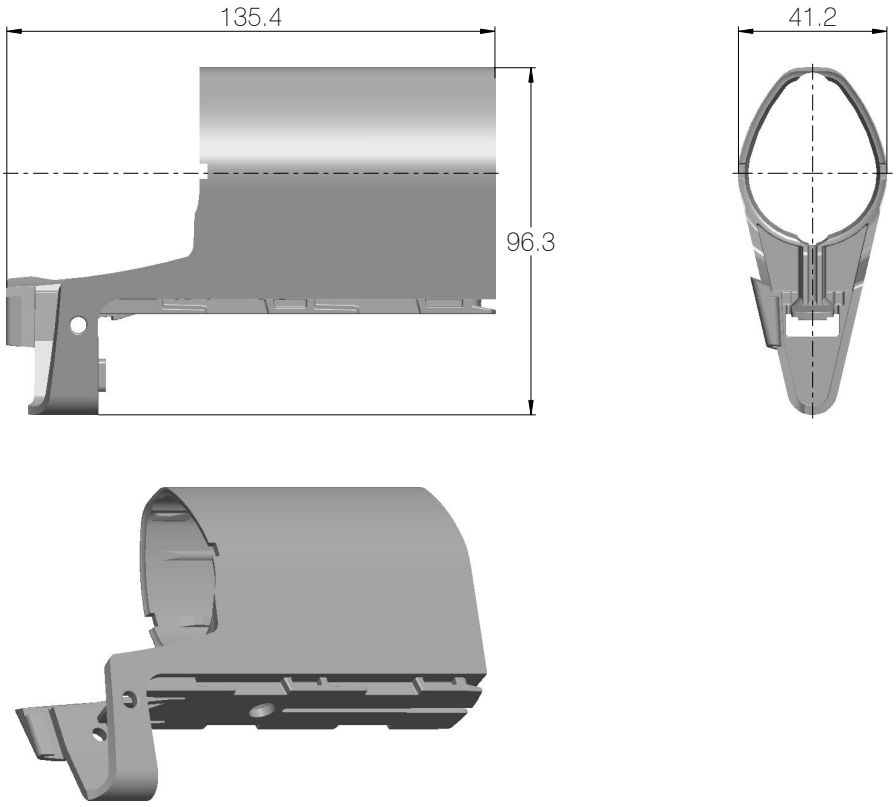

Drawing No: 1015W4003

The adapter 1015W9003 includes a screw that is halfway mounted, thus everything as one part.

Screw head torx size: T15
Screw torque: 1.2 ± 0.2 Nm

Mounting bracket (frame flat)

Article No. 1015W1001

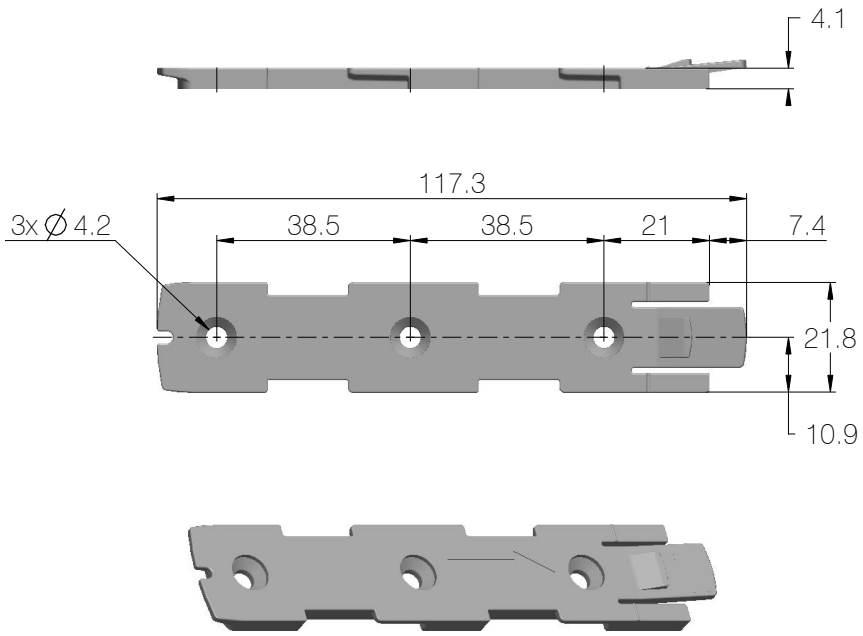

Drawing No.: 1015W4001

Mounting bracket (frame flat) w/M4 nuts

Article No. 1015W9009

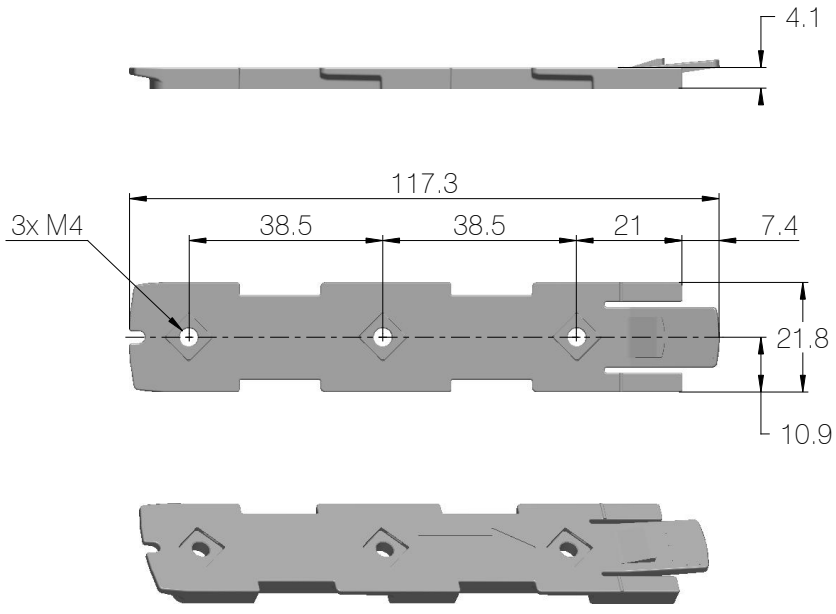

Drawing No.: 1015W4009

Mounted on frame

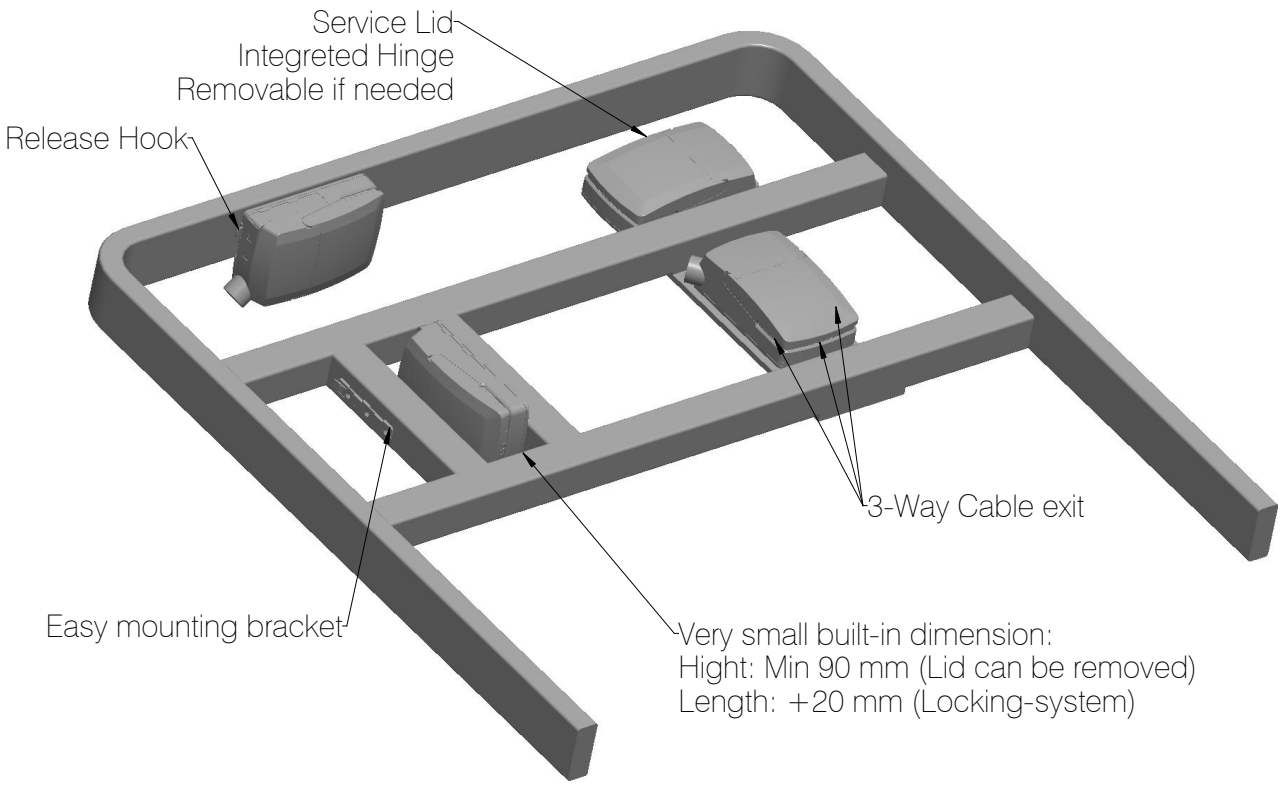

Drawing No.: 1013W4008

Mounting instructions

When mounting the control box onto the actuator (1)

Simply slide on the bracket until you hear a clear click (2)

Slide on the control box until you hear a click and the box is mounted (3)

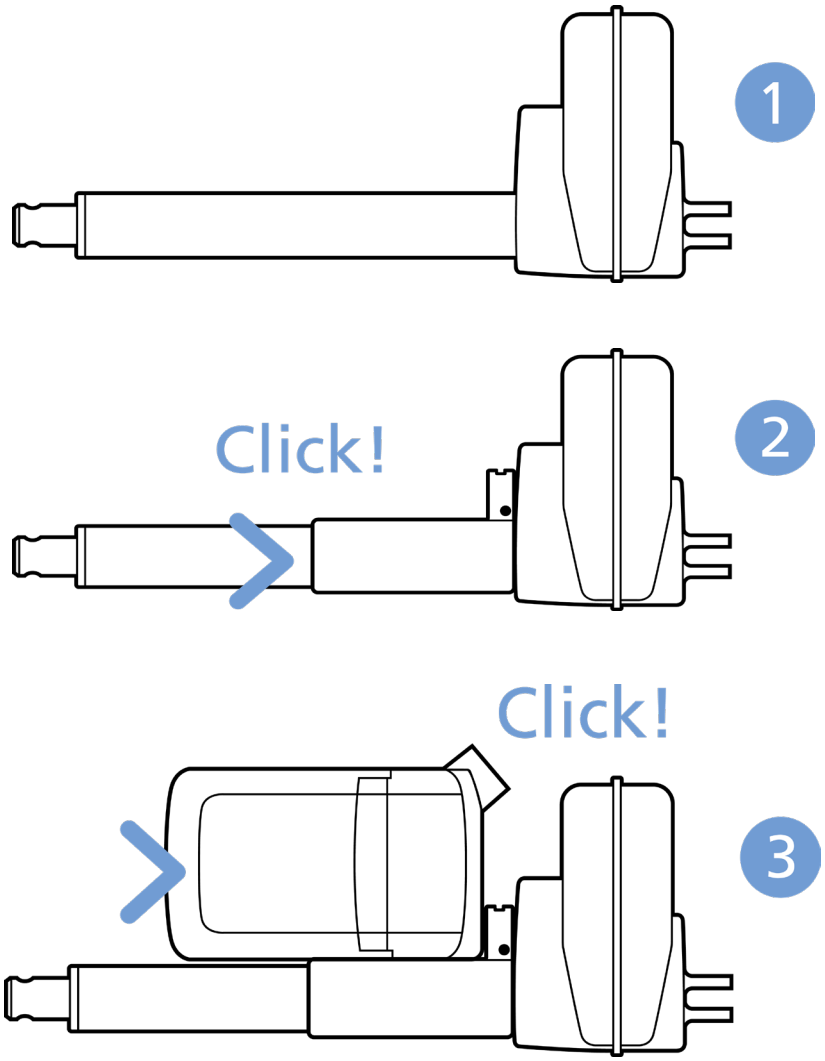

It is recommended to mount the CA63 in a position that allows water to escape.

Recommended torque: 0.6Nm +/-0.1

The bracket can be mounted to the bed frame or any other application by following one of the following mounting procedures:

1. M6 nut to be placed in bracket and fixed with M6 bolt from the rear side
2. M5 machine screw with flat washer to be fixed through bracket with nut on the rear side
3. Self-tapping screw to be placed through bracket and onto the frame

Mounting of cables and cable lock

CA63 has a uniquely designed cable lid. The lid also works as an integrated cable lock when closed.

1. Mount cable plugs in control box
2. Close lid until lock snaps into place (see arrows)

To allow free access to the cables, the lid has a rest position when completely opened.

It is possible to remove the lid by lifting it a few degrees and pulling it away from the housing under tight mounting conditions.

Cable management

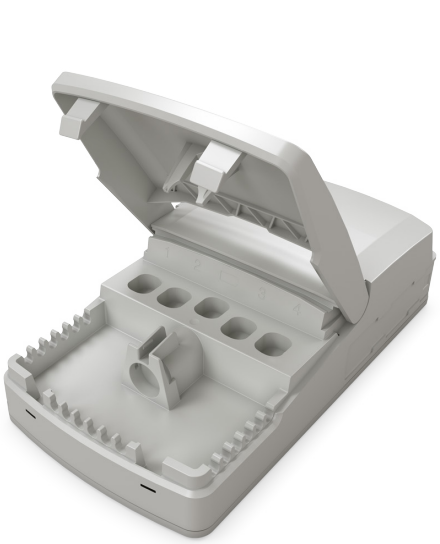

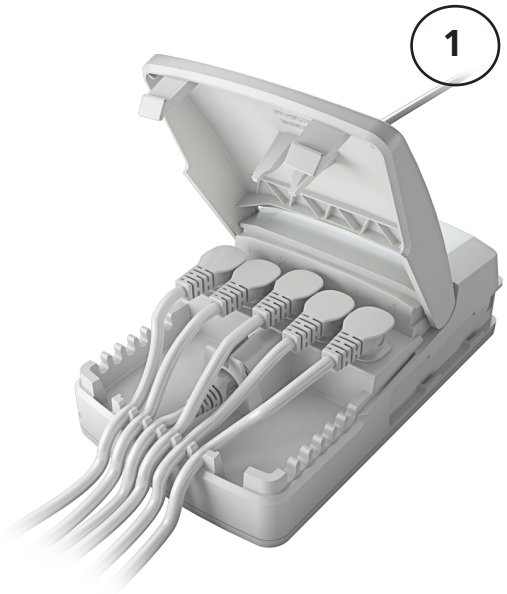

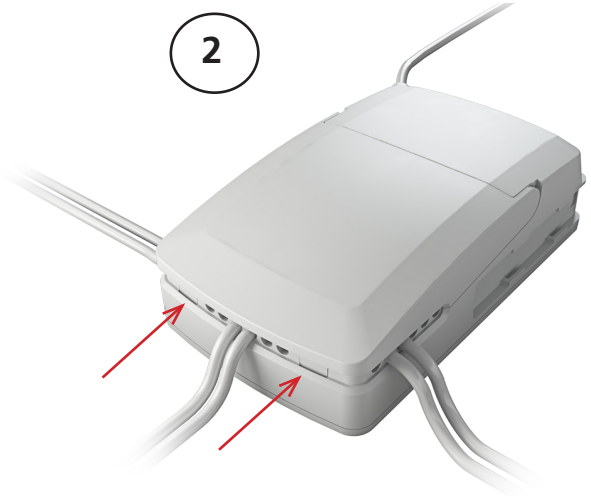

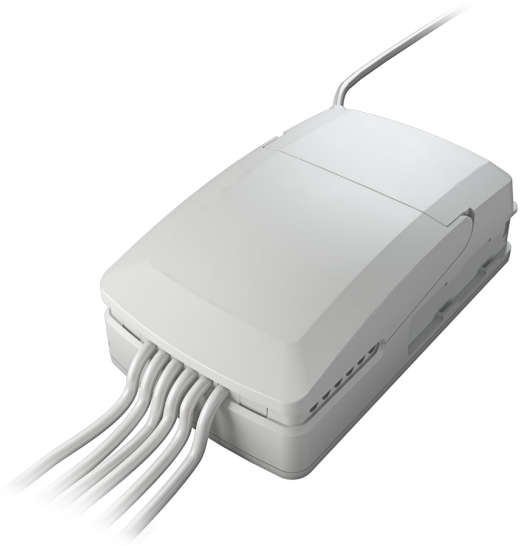

Recommendations

- If there is a risk that the system is overloaded and therefore shuts down thermally, LINAK recommends to use quick release actuators. These will allow functions to be lowered manually in case of a CA63 malfunction due to misuse/abuse.
- If the customer has other essential performance than “no unintended movement”, he must consider this in his own risk analysis. LINAK disclaims any liability.
- If the actuator or the control cable is removed from the control box, the cable lock must be applied. To ensure movement in this case, LINAK recommends to use quick release actuators in the application.
- To avoid cables from being damaged by pulling, LINAK recommends to make safe cabling. If movement is an essential performance, LINAK recommends to apply quick release actuators, for example, to ensure movement.
- To avoid thermal protection from being activated, do not exceed load specifications. If movement is an essential performance, LINAK recommends to apply quick release actuators, for example, to ensure movement.
- Sales must request a review of the products according to current cut-off limits.
- Push plugs fully into correct sockets and make sure that the plugs are completely inserted.
- Mount the control box lid and close it until locked in place.

Motor cable

Always use 6-wire cables.

Please note that angled motor cable plugs are required for connection to the control box.

Warnings

- PB31 MUST NOT BE CONNECTED DIRECTLY TO CA63 HAND CONTROL CONNECTOR (RJ45) AS THIS WILL CAUSE DAMAGE TO PB31. Can only be programmed with PB31 by use of a special programming adaptor.
- Use EPR or ensure that the user takes care not to squeeze the mains cable.
- Always check correct assembly after mounting and service to ensure that the cable lock is mounted. (Connectors are usually removed during cleaning)
- Always use approved chemicals with the housing as the plastic may show corrosion caused by some chemicals. As a result water may accumulate/gather in housing.
- Take special precautions concerning 3rd party interfacing. Please contact LINAK for further information.
- Make a review of all product specifications before system set-up if the current cut-off limit is higher than the maximum allowed current cut-off for the actuator.
- To avoid cable interruption and actuator defects make a proper cable installation and inspect regularly for wear and damage. Defective parts must be replaced.
- After service inspection, the application must be tested for correct functionality before it is put into operation to avoid actuator plugs being mixed during service. Operators must not be inside entrapment area.
- To avoid electrical failure or system disturbance inspect regularly for wear and damage. Defective parts must be replaced.
- Make a proper cable installation to avoid short-circuit cables for handset/controls. Regular inspection must be made for wear and damage. Defective parts must be replaced.
- Do not mount the actuator with the spindle facing downwards to avoid that the actuator slips off the bracket with mounted control box. The bracket can come loose when exposed to shock or hard vibratio, for instance when passing doorsteps. Regular inspection must be made to ensure proper fixation of control box and bracket on actuator.

CB6



The control box CB6 has been specially developed for use together with LA27/LA40 actuator in the care and rehab industry.

The control box is designed to be mounted on the actuator LA27/LA40 as with the CB9 and LA31 system.

Usage

Duty cycle: 2/18; 2 minutes continuous use followed by 18 minutes not in use

Approvals: CB6 is approved according to EN60601-1 / UL60601-1

Mains supply grid should be limited to the highest prospective short circuit current of 35 A.

Demands to mains supply safety for the application in accordance with IEC 60601-1 ed. 3.2, § 8.11.5

The CB6 can only be combined with LA27/LA40 and HB30/HB70/HL70/HB80 and HL80

Recommendations

- Be aware of the hand control configuration (e.g. CH1, 2, 3 should be CH1, 3, 4).
- Same cables variants as for CB9 Careline and CB12.

Connecting the system:

- Do not connect the mains cable until all actuators have been connected to the control box.
- Start by connecting the hand control to the control box. The connection at the control box is marked with “HB”.
- Connect the different actuators to the different channels on the control box. Each channel is marked with a number (e.g. “1”, “2”, “3”....).
- Check that all plugs are well connected and firm pushed into the connection plug. Due to the fact that LINAK control boxes are designed for a high IP degree, a firm force can be required.
- CONNECT the mains and turn on the power!
- Finally, connect the battery (BA18) with special T-cable or normal battery cable depending on the specified system.
- The actuators can now be operated by pushing a button on the hand control. Use only one button at a time.

Attention should be paid to the following:

- Control boxes must only be connected to the mains voltage specified on the label.
- The control box must be connected in such a way that the cables are not trapped, exposed to tension or sharp objects, when the application is moved in different directions.

CB6S MK2



The CB6S MK2 is part of the LINAK® OpenBus™ product range that provides more flexible solutions no matter which actuator concept is preferred.

It is a powerful control box with Switch Mode Power Supply (SMPS) which is typically used for applications like hospital beds, couches/tables for treatment and examination and other medical applications.

Features and options

Power supply: SMPS Universal: 200 W, 100-240 VAC 50/60 Hz

Usage

Operating temperature: +5 °C to +40 °C
Storage temperature: -10 °C to +50 °C
Relative humidity: 20% to 80% - non-condensing
Atmospheric pressure: 700 to 1060 hPa
Meters above sea level: Max. 3000 meters

Mains supply grid should be limited to the highest prospective short circuit current of 1500 A.

Demands to mains supply safety for the application in accordance with IEC 60601-1 ed. 3.2, § 8.11.5

Approvals: IEC 60601-1
ANSI/AAMI ES 60601-1
CAN/CSA-C22.2 No. 60601-1, Australian, Canadian deviation

Low power consumption

If there is no activity for 2 minutes, the CB6S MK2 will shut down and thereby turn off the lights in all accessories. If any accessories or other devices activate power request, the CB6S MK2 will wake up again. See the state and transitions diagram of the CB6S MK2 below.

Mains operation:

Mains is connected and full operation is possible. If the CB6S MK2 is charging the battery, it will stay in this state. All indicators will turn off after 2 minutes, except the charging indicator.

Mains low power:

Mains is connected, but the CB6S MK2 is shut down to save as much power as possible.

Battery operation:

Mains is disconnected and the CB6S MK2 operates on battery. Full operation is possible as long as the battery voltage is above approx. 22 V.

Battery low power:

Mains is disconnected and the CB6S MK2 is shut down to save as much battery power as possible.

The diagram below shows the state and transitions of the CB6S MK2.

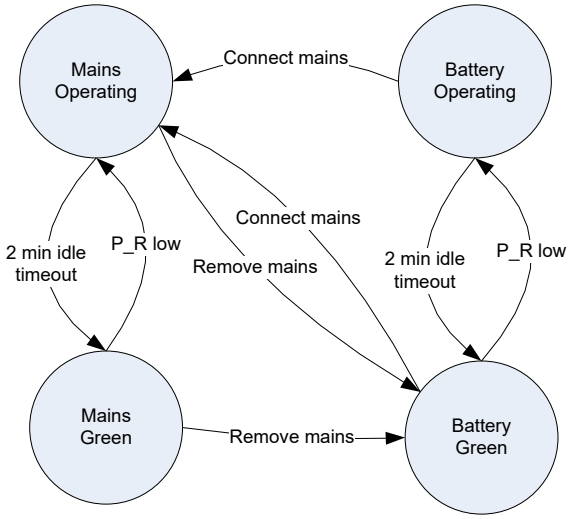

Possible combinations

If a mains cable with pigtail is applied, CLASS I is obtained – however the CB label will indicate CLASS II. Eventually, the OEM applying for an application approval must clarify if such a solution is accepted by the used test house.

LED status during usage

The LED on CB6S MK2 can show 3 different colours during usage.

Green	CB6S MK2 is connected to mains supply.
Green + Yellow	CB6S MK2 is operated on mains supply. (* See later page re. 'First-failure-safe monitoring')
Yellow	CB6S MK2 is battery-operated (power request)

Battery operation

(standard functionality)

BATTERY LEVELS:

BATTERY HIGH:	> 19.6 V	normal
BATTERY MEDIUM:	17.5 - 19.6 V	alarm
BATTERY LOW:	< 17.5 V	critical

- If the battery voltage is at 'medium level', a battery alarm beeps constantly when activating the hand control/ACx. Medium level means that battery charging is necessary to maintain the best possible lifetime. The medium level battery limit corresponds to approx. 17.5-19.6 V (+/- 5%).
- If the battery voltage is at 'low level' (< 17.5 V), the battery alarm function shuts down all operation immediately. If trying to operate the system anyway, the battery could become deeply drained or the actuator system could be damaged. When at critical battery level, there is a risk that the processor will incorrectly monitor the end of stroke. Crashing the actuator could be a result. The critical level limit corresponds to approx. < 17.5 V (+/- 5%).
- If a battery back-up is applied, it only starts battery charging when it is connected to the mains.
- A battery stored at 25 °C has to be recharged every 6-7 months.
- Prior to the first use of LINAK batteries, please make sure that they are charged for 24 hours in order to reach proper function and prolong the battery lifetime.
- The longest lifetime is obtained when the battery is fully charged.

If backlight-supported hand control is used:

When CB6S MK2 is powered by mains voltage:

If a hand control button is activated, the backlight turns fully on.

When the hand control button is released, the light is dimmed again after approx. 10-15 seconds. The backlight turns completely off after 2 minutes.

Exception: While charging the hand control, the backlight will stay dimmed until charging is finished.

When CB6S MK2 is powered by battery:

If a hand control button is activated, the backlight turns fully on.

When the hand control button is released, the light is dimmed again after approx. 10-15 seconds. The backlight turns completely off after 2 minutes.

First-failure-safe monitoring

CB6S MK2 is equipped with a first-failure-safe indication controlled by hardware (power request). At normal operation (no failure observed), the power LED turns yellow when a hand control button is activated.

If the LED has turned yellow AND the hand control has NOT been activated, it indicates that a failure has occurred (first failure).

NOTE: Even though the LED lights yellow before the hand control is activated, it is possible to operate the CB6. However, the first failure is somehow still in the control box and must be removed to prevent a further failure that might lead to a hazardous situation.

To meet the safety requirements, the device must have a dual switch safety concept.

Further information about OpenBus™ safety concepts, please contact your local LINAK near by you.

The safety function must be monitored and this monitoring is implemented in the software.

In case of a failure (fatal error), any further operation of any channels is prevented. In case of a fatal error, the CB6S MK2 responds with the following information:

Failure indication:

- All control LEDs are blinking
- The CB6S MK2 buzzer beeps shortly if a hand control is activated
- The error can be reset by activating H0 and H1 OR H10 and H11 or H20 and H21 (standard SW only) on a hand control.

Recommendations

- To avoid unintended activation of actuators if hand control cables short-circuit, LINAK® recommends to use an OpenBus™ system (CB6S MK2).
- If there is a risk that the system is overloaded and therefore shuts down thermally, LINAK recommends to use quick release actuators.
  These will allow functions to be lowered manually in case of a CB6S MK2 malfunction due to misuse/ abuse.
- If the customer has other essential performance than ‘no unintended movement’, he must consider this in his own risk analysis. LINAK disclaims any liability.
- If the actuator or the control cable is removed from the control box, the cable lock must be applied.
  To ensure movement in this case, LINAK recommends to use quick release actuators in the application.
- To avoid cables from being damaged by pulling, LINAK recommends to make safe cabling. If movement is an essential performance, LINAK recommends to apply quick release actuators, for instance, to ensure movement.
- To avoid thermal protection from being activated, do not exceed load specifications.
  If movement is an essential performance, LINAK recommends to apply quick release actuators, for example, to ensure movement.
- Sales must request a review of the products according to current cut-off limits.
- Push plugs fully into correct sockets and make sure that the plugs are completely inserted.
- Mount control box cover and close cover until locked in place.
- When mounting the CB6S MK2 using the two screw holes, you must use the spacer. This is to avoid the CB6S MK2 housing from breaking which can lead to malfunction and lower IP ratings.

Warnings

- Use EPR or ensure that the user takes care not to squeeze the mains cable.
- Always check correct assembly after mounting and service to ensure that the cable lock is mounted. (connectors are usually removed during cleaning)
- Always use approved chemicals with the housing as the plastic may show corrosion caused by some chemicals. As a result, water may accumulate/gather in the housing.
- Take special precautions concerning third-party interfacing. Please contact LINAK for further information.
- Make a review of all product specifications before system setup, if the current cut-off limit is higher than the maximum allowed current cut-off for the actuator.
- To avoid cable interruption and actuator defects, make a proper cable installation and inspect regularly for wear and damage. Defective parts must be replaced.
- After service inspection, the application must be tested for correct functionality before it is put into operation to avoid actuator plugs being mixed during service. Operators must not be inside entrapment area.
- To avoid electrical failure or system disturbance, inspect regularly for wear and damage. Defective parts must be replaced.
- Make a proper cable installation to avoid short-circuit cables for hand controls and other controls. Regular inspection must be made for wear and damage. Defective parts must be replaced.
- Do not mount the actuator with the spindle facing downwards to avoid that the actuator slips off the bracket when the control box is mounted. The bracket can come loose when exposed to shock or hard vibrations, for instance when passing doorsteps. Regular inspection must be made to ensure proper fixation of control box and bracket on the actuator.

CB8-A



The CB8A is a battery powered control box operating up to 3 actuators individually. One of these channels can be used either as an external emergency stop device or for battery charging.

Simple design and high quality construction make the CB8A an ideal control box choice for mains-free operation of beds, chairs, tables and many other mobile applications

Usage

Duty cycle:	Max. 5% or 3 min. in use followed by 57 min. not in use
Ambient temperature:	+5° to +40°C
Approvals:	IEC60601-1:2005 3rd edition approved ANSI/AAMI ES60601-1:2005 3rd edition approved

Recommendations

- Note: max. accumulated power consumption is 10 Amp.
- The measurement is individual for each channel, but if the total current consumption reaches 10 Amp, the CB cuts off the current. The CB and the actuator are therefore protected via a common measurement.
- External Charger CH01 has to be ordered separately. By use of charger CH01 it is possible to activate the actuators when charging. However, this is not recommended as it can damage the control box or the charger CH01.
- Battery kit BA0801 has to be ordered separately for versions M, G, H, Q, R (2 channel) and version M (3 channel).
- When using the CB8A with emergency stop button, the stop button must be released before charging batteries.
- Acoustic alarm sounds when batteries are low and recharging should be started. The alarm level corresponds to approx. 17-18 VDC.
- If the CB800XXXXN-X0 option is chosen, an external emergency stop device (NC) or short-circuiting connection must be mounted in channel 3, before connection to allow proper function and battery charging.

Important: Individual current cut-off:

The current to each actuator is monitored and when this reaches a specified value, the current to that actuator is cut-off. As the actuators do not have the same current consumption the cut-off values must also be different. Therefore it must be specified which actuator is to be connected to which channel:

CURRENT CUT-OFF (A)
2 A (2.35 +/- 0.35 Amp)
3 A (3.00 +/- 0.35 Amp)
4 A (4.00 +/- 0.50 Amp)
5 A (5.35 +/- 0.50 Amp)
6 A (5.90 +/- 0.70 Amp)

Values in brackets show tolerances.

CB8-T



The CB8-T is developed for use with LINAK actuators and handsets. The control box can operate up to 2 actuators individually.

The simple compact design combined with high quality makes the control box ideal for use with beds, chairs, tables and many other applications.

Important

Individual current cut-off:

The current to each actuator is monitored and when this reaches a specified value, the current to that actuator is cut-off.

As the actuators do not have the same current consumption the cut-off values must also be different. Therefore it must be specified which actuator is to be connected to which channel:

CURRENT CUT-OFF (A)
2 A (2.35 +/- 0.35 Amp.)
3 A (3.00 +/- 0.35 Amp.)
4 A (4.00 +/- 0.50 Amp.)
5 A (5.35 +/- 0.50 Amp.)
6 A (5.90 +/- 0.70 Amp.)

Values in brackets show tolerances.

CB9



The CB9 CARELINE and CB9 CARELINE Basic have been developed for use together with LA31/LA31R, LA34/LA34R in the Care & Rehab industry. CB9 and LA31 can be fully integrated which saves mounting and wiring or be installed separately.

Exchangeable mains cables, Electronic Overload Protection (EOP), EAS, earth connection (Class 1) and exchangeable mains fuse makes CB9 a good choice for the simple hospital and care beds.

Usage

Duty cycle:	Max. 10% or 2 min. continuous use followed by 18 min. not in use
Ambient temperature:	+5° to +40°C
Compatibility:	Compatible with up to 4 actuators, type LA31 and LA34, via 4-pole DIN sockets. Compatible with BA18

Mains supply grid should be limited to the highest prospective short circuit current of 35 A.

Demands to mains supply safety for the application in accordance with IEC 60601-1 ed. 3.2, § 8.11.5

Approvals:	IEC60601-1 ANSI/AAMI ES60601 CSA CAN/CSA C22.2 NO. 60601-1 PSE Japan

Recommendations

LA34 fast motor is not compatible with any standard versions of CB9, due to high current consumption. For use of LA34 standard motor and small motor always use a CB9 with EAS.

Additionally, actuators with reed switch are not compatible with analogue CB9s because of a conflict between the CB signal wires and the reed wires!

Mounting



CB9 is equipped with a green LED for indication of mains power connected. When thw CB9 is connected to mains, the LED is green. Connected only to battery, the LED is off.

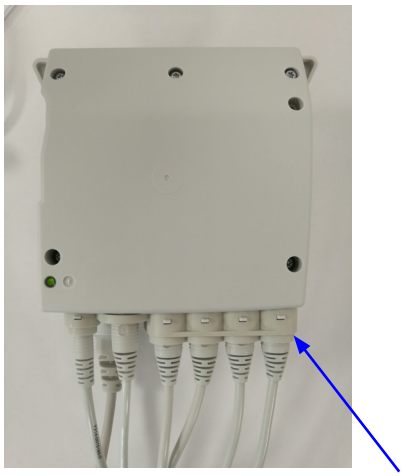

The cables are locked in position with a locking mechanism.

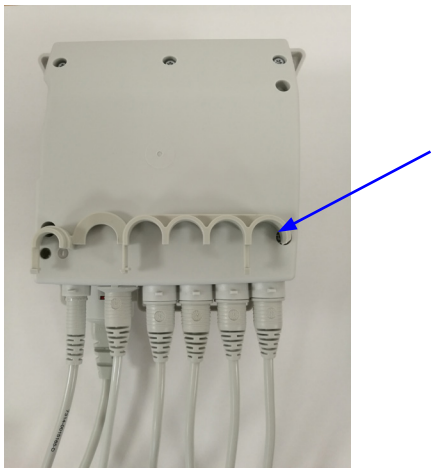

The locking mechanism is shown here (not in position)



CB9 mounted on actuator, LA31. CB9 can be mounted and fixed together with LA31 with one screw

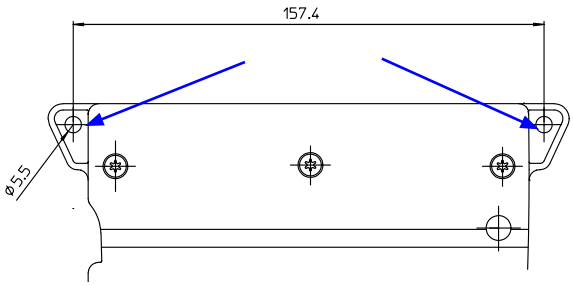

CB9 for mounting on application. Shows the two holes used for mounting

CO41



The LINAK control box CO41 offers a consolidated range of unprecedented features – all utilising standardised technology, interfaces and compatibility.

The CO41 for LINAK actuators is intended for the control of, for example, hospital bed movement.

Usage

Operation temperature:	+5 °C to +40 °C
Storage temperature:	-10 °C to +50 °C
Relative humidity:	20% - 80% not condensing
Atmospheric pressure:	700 to 1060 hPa
Meters above sea level:	Max. 3000 meters
Duty cycle:	10% - 2/18 min. on/off continuous use. Maximum power is 120 W for 80 seconds and 60 W for 40 seconds at 25 °C

Mains supply grid should be limited to the highest prospective short circuit current of 1500 A.

Demands to mains supply safety for the application in accordance with IEC 60601-1 ed. 3.2, § 8.11.5

Approvals:	IEC60601-1 ANSI/AAMI ES60601-1 CSA CAN/CSA-C22.2 NO. 60601-1

LED indicator



CO41 is equipped with a green LED for indication of mains power connected.

When the CO41 is connected to mains, the LED is green. Connected only to battery, the LED is off.

Connected to MAINS	
LED colour	**Indication of operation**
Green	**On mains, not activated by hand or foot control.** The system is working ok and is ready for normal operation.
Yellow	**On mains, not activated by hand or foot control.** The system is defective and should not be operated.
Yellow	**On mains, activated by hand or foot control.** The system is working.

Not connected to mains but with BATTERY back-up	
LED colour	**Indication of operation**
Orange	**On battery, activated by hand or foot control.** The system is working.
No LED	**On battery, not activated by hand or foot control** or CO41 not connected to mains.

Acoustic signal functionality

The buzzer will make a warning, when a button on the hand control is pressed, and the battery capacity is low.

The buzzer can also be activated by the control box to signal other conditions. This must be specified in the control box software.

Mounting

For mounting on a LINAK actuator (LA27, LA31 or LA40), a mounting bracket is required.

Dimensions – mounted with LA40

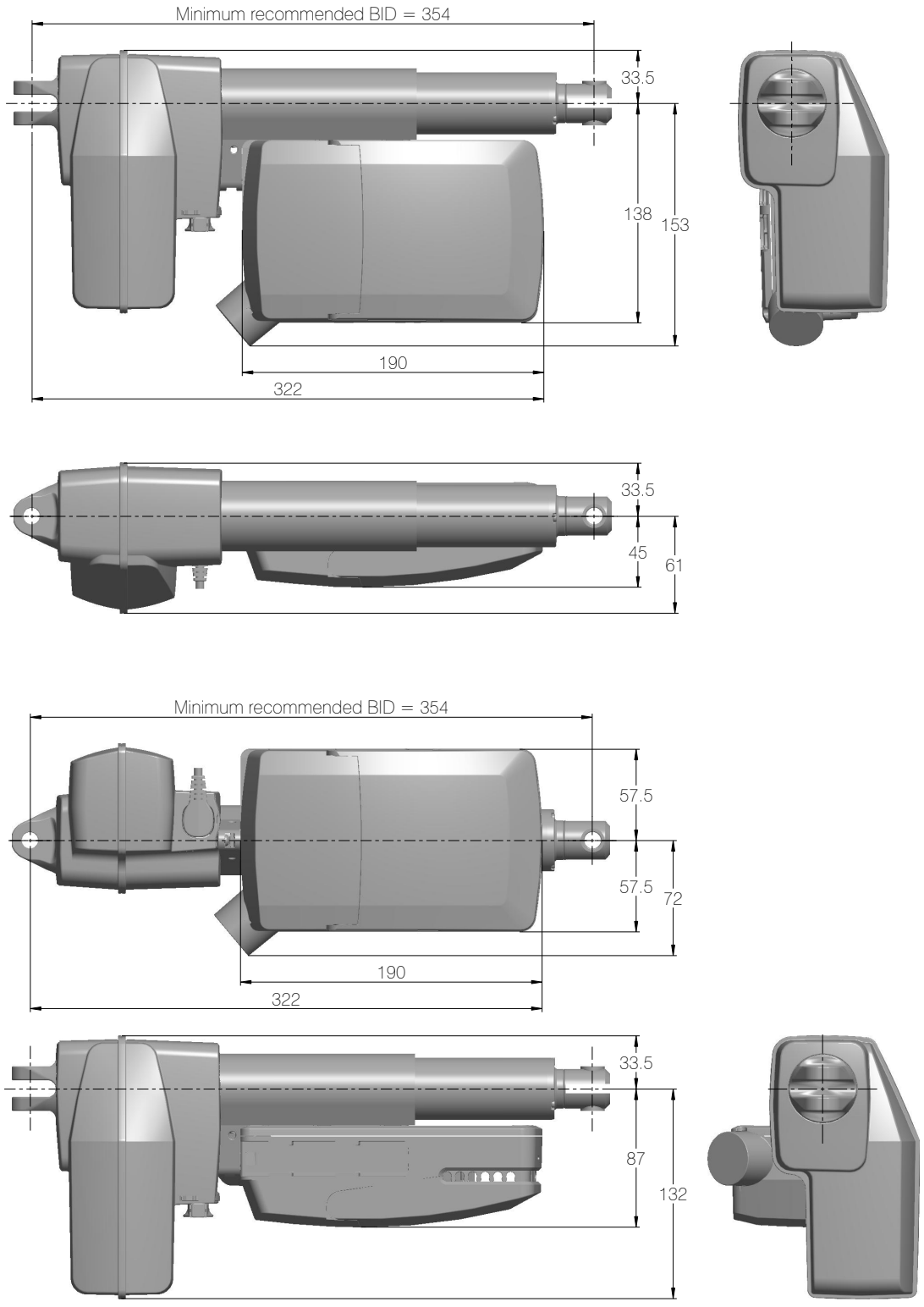

Drawing No.: 1015W4013

Dimensions – mounted with LA31

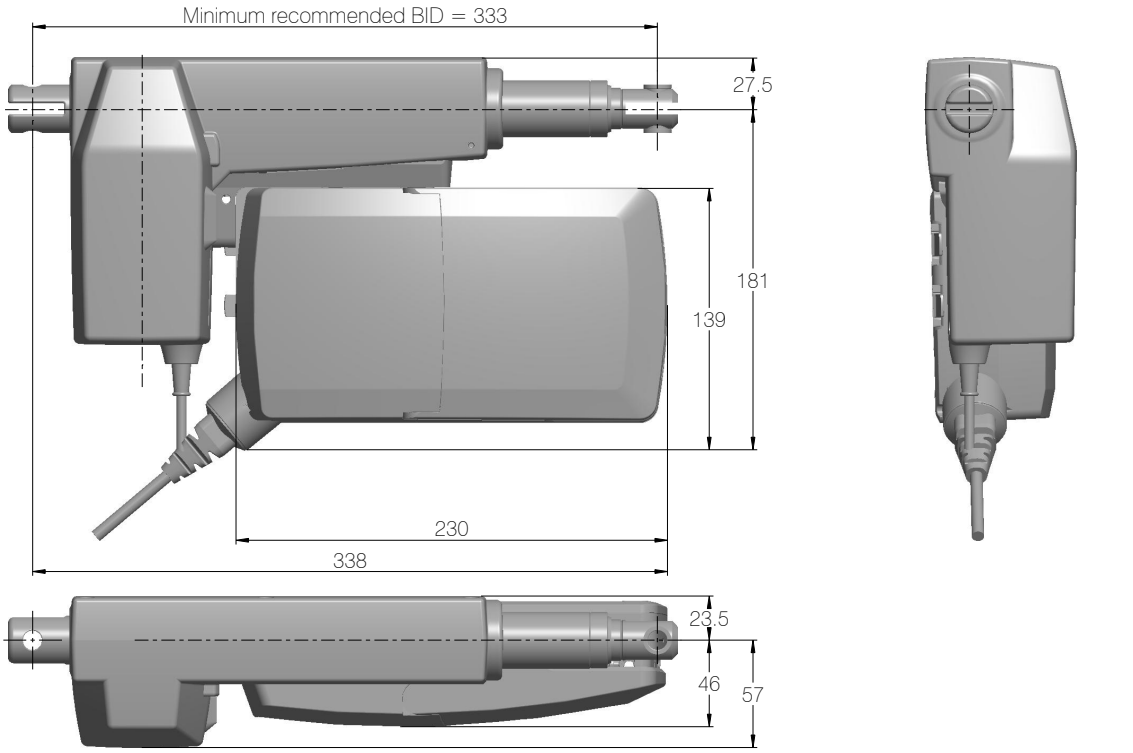

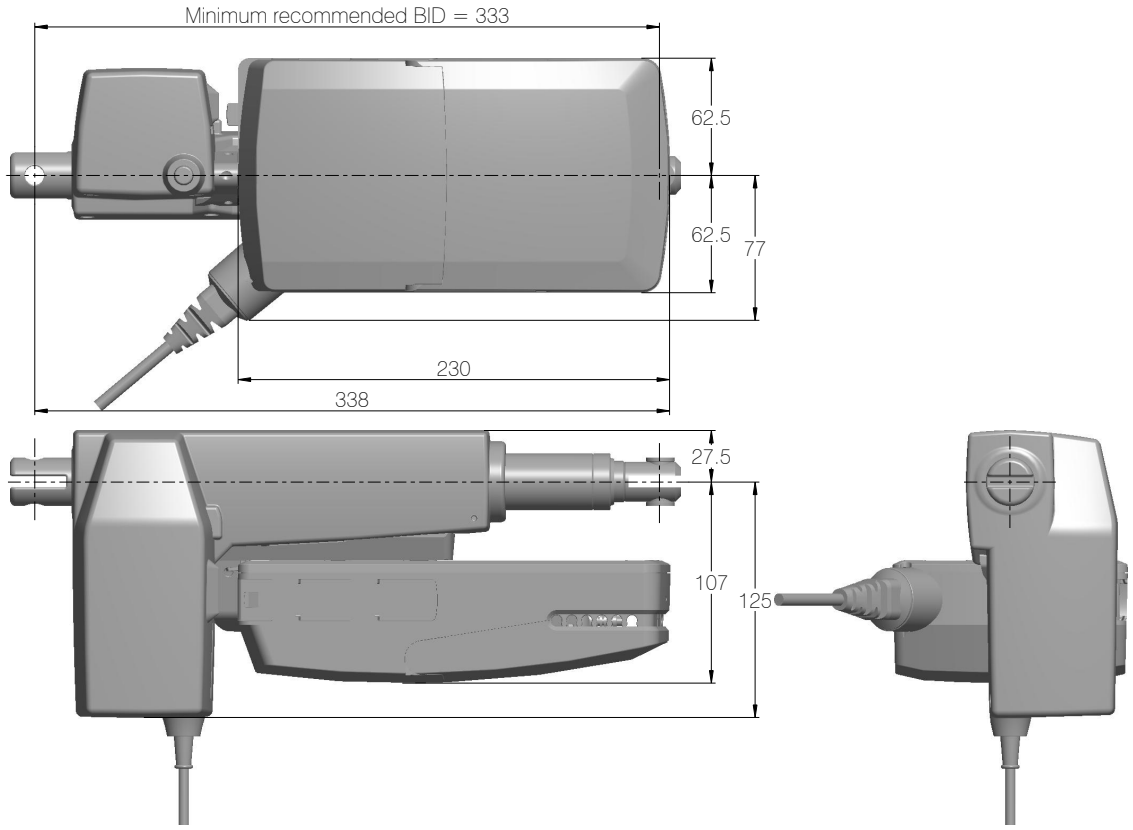

Drawing No.: 1015W4012

Dimensions – mounted with LA27

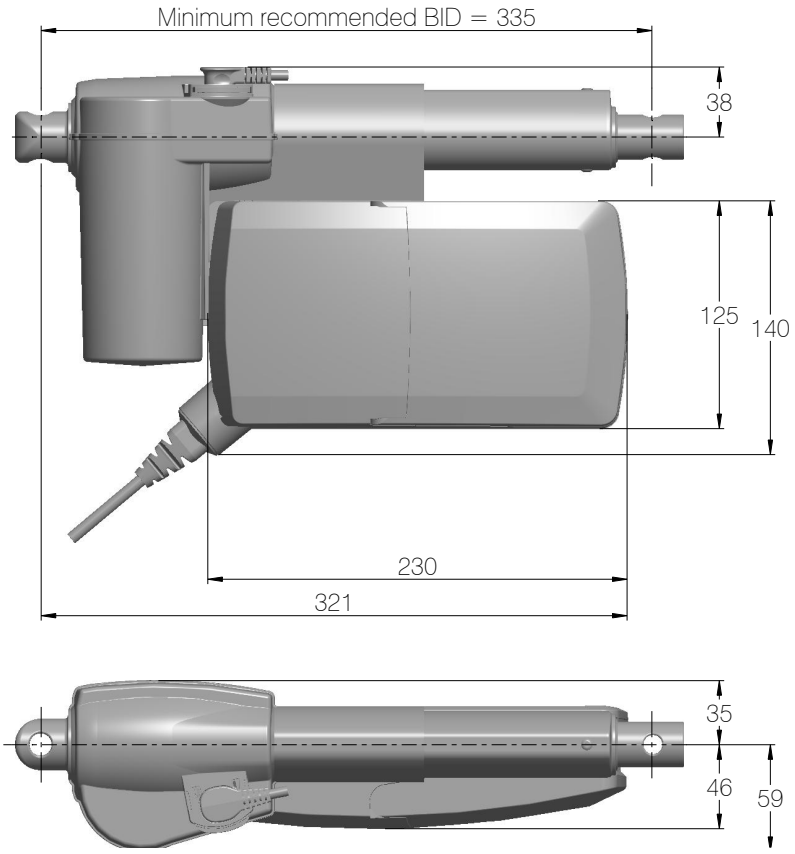

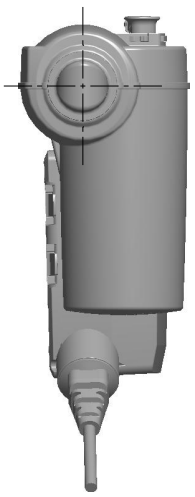

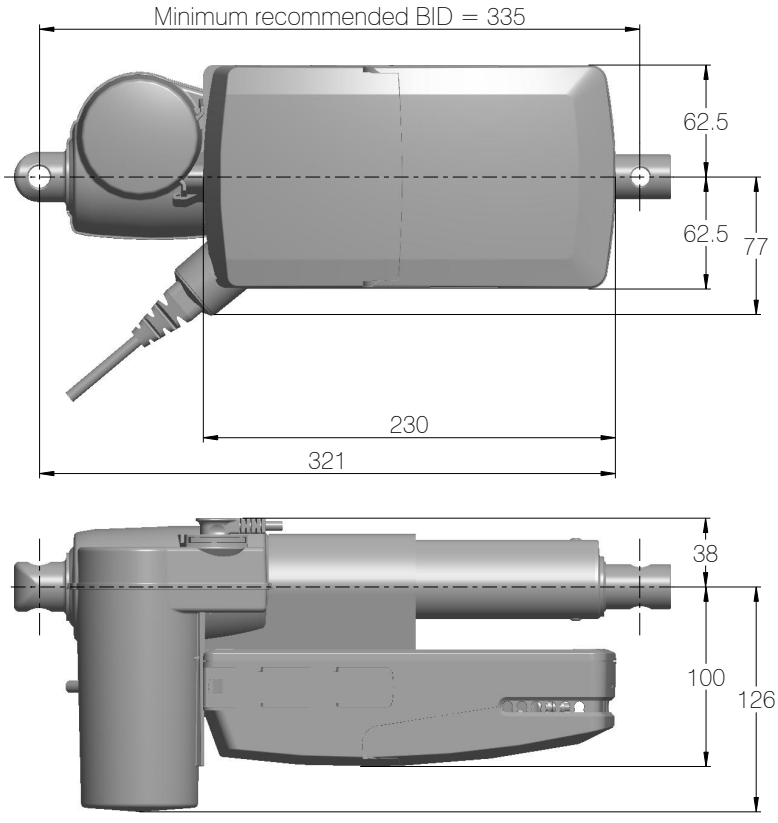

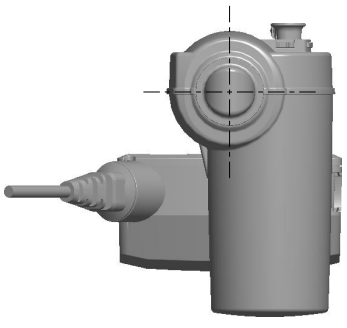

Drawing No.: 1015W4011

Mounting brackets

For mounting with LA40

Article No.: 1015W1002

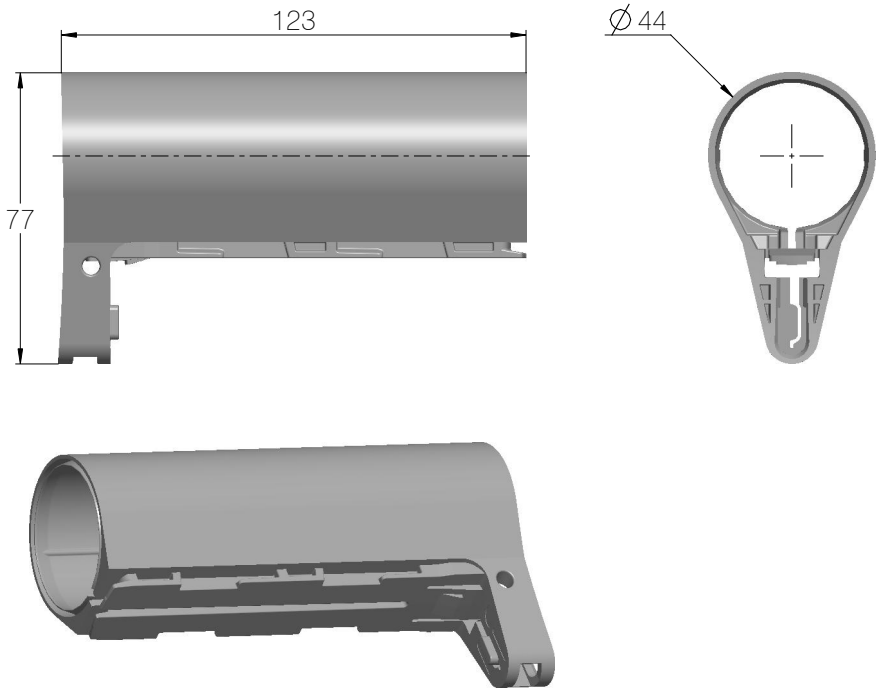

Drawing No.: 1015W4002

For mounting with LA31

Article No.: 1015W1004

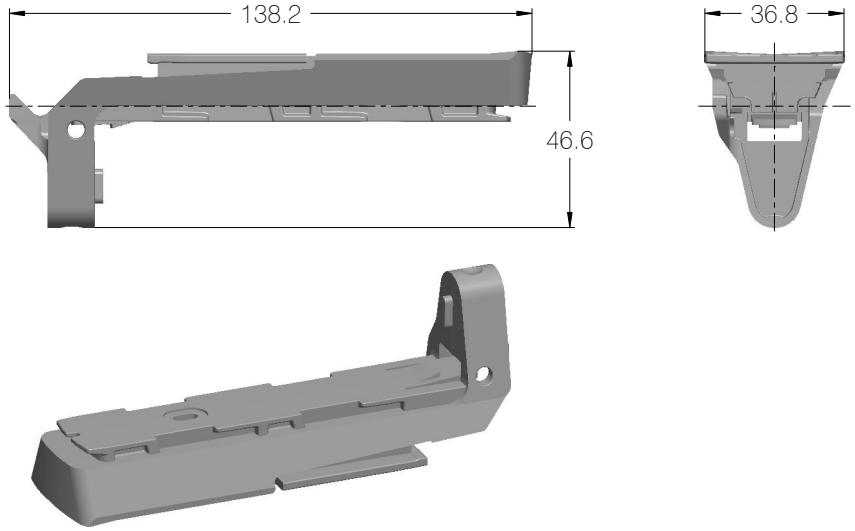

Drawing No.: 1015W4004

For mounting with LA27

(Article No.: 1015W9003)

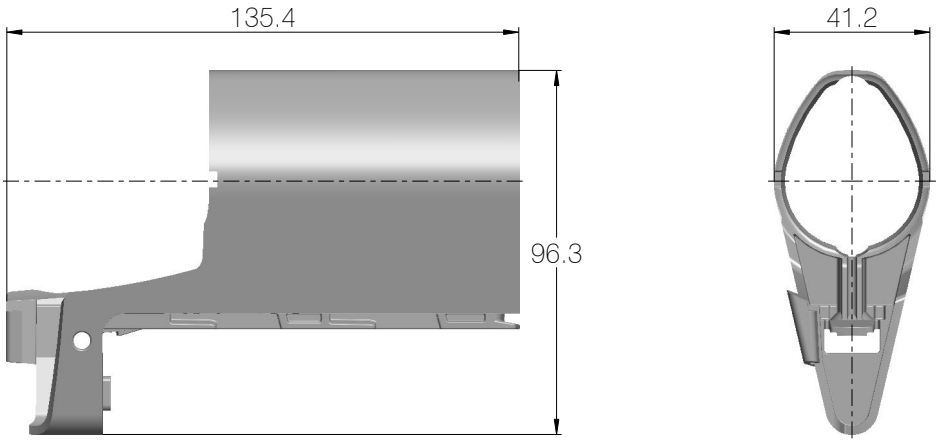

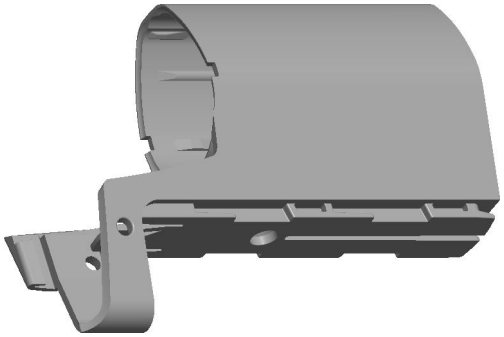

Drawing No: 1015W4003

The adapter 1015W9003 includes a screw that is halfway mounted, thus everything as one part.

Screw head torx size: T15
Screw torque: 1.2 ± 0.2 Nm

Mounting bracket (frame flat)

Article No. 1015W1001

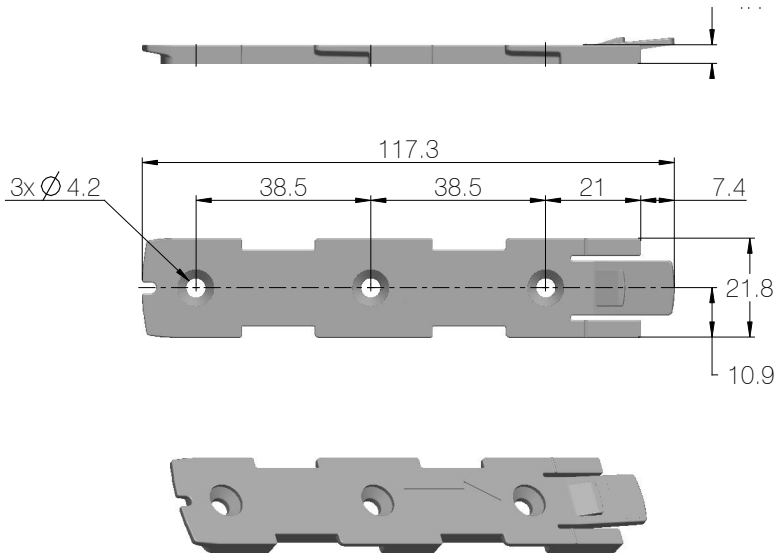

Drawing No.: 1015W4001

Mounting bracket (frame flat) w/M4 nuts

Article No. 1015W9009

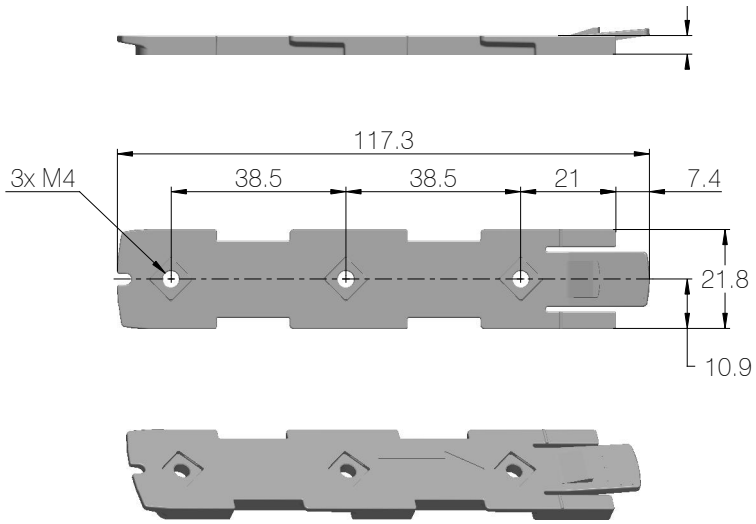

Drawing No.: 1015W4009

Mounted on frame

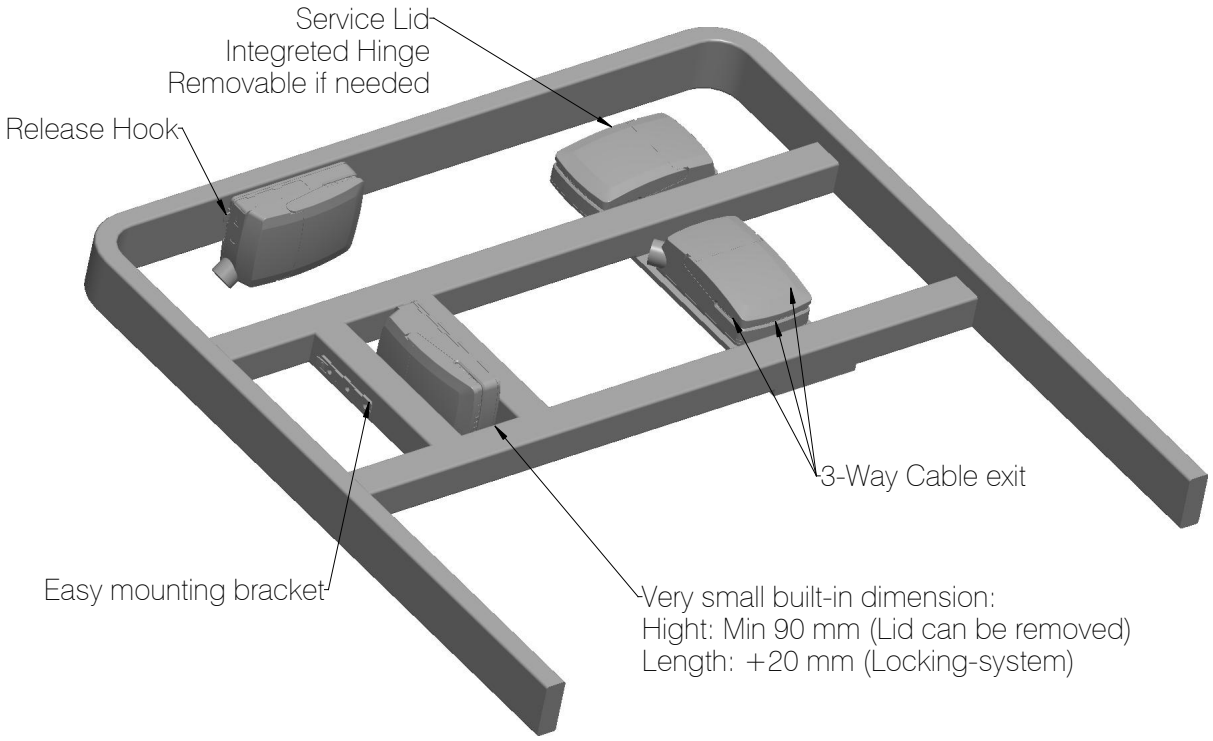

Drawing No.: 1013W4008

Mounting instructions

When mounting the control box onto the actuator (1)

- Simply slide on the bracket until you hear a clear click (2)
- Slide on the control box until you hear a click and the box is mounted (3)

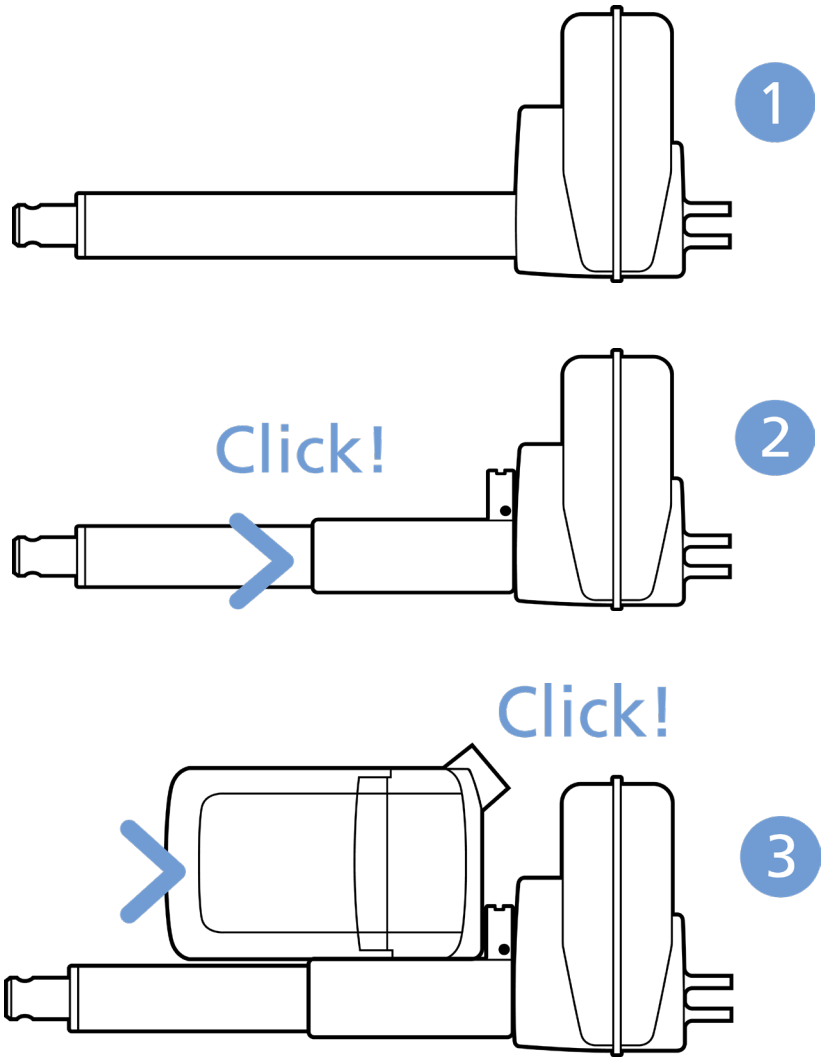

It is recommended that the CO41 is mounted in a position that allows water to escape.

Recommended torque: 0.6 Nm +/-0.1

The bracket can be mounted to the bed frame or any other application by following one of the following mounting procedures:

1. M6 nut to be placed in bracket and fixed with M6 bolt from the rear side.
2. M5 machine screw with flat washer to be fixed through bracket with nut on the rear side.
3. Self-tapping screw to be placed through bracket and onto the frame.

Mounting of cables and cable lock

CO41 has a uniquely designed cable lid. The lid also works as an integrated cable lock when closed.

1. Mount cable plugs in control box
2. Close lid until lock snaps into place (see arrows)

To allow free access to the cables, the lid has a rest position when completely opened.

It is possible to remove the lid by lifting it a few degrees and pulling it away from the housing under tight mounting conditions.

Cable management



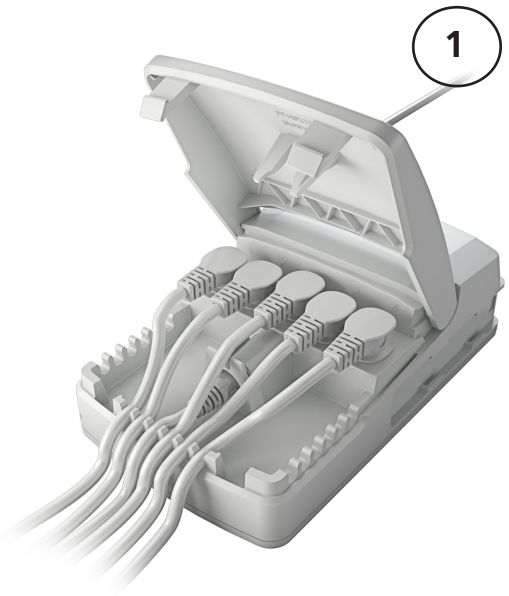

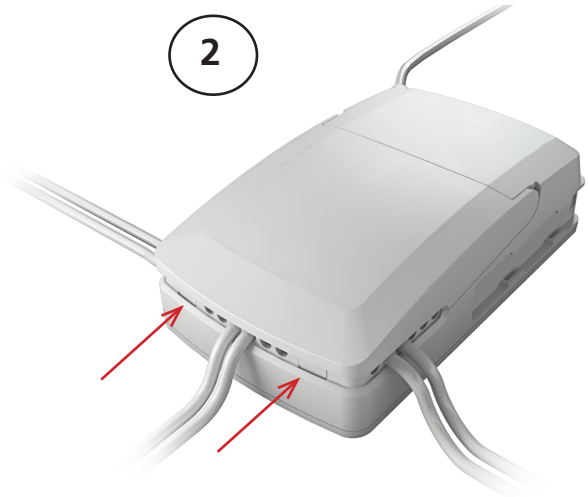

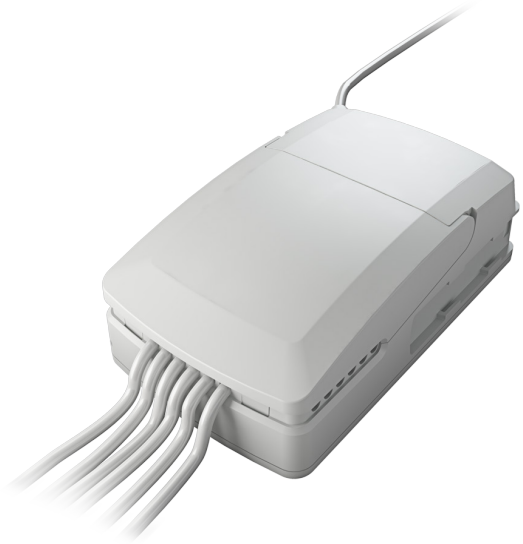

Recommendations

- To avoid unintended activation of actuators if hand control cables short-circuit, LINAK recommends to use an OpenBus system (CO41).
- If there is a risk that the system is overloaded and therefore shuts down thermally, LINAK recommends to use quick release actuators. These will allow functions to be lowered manually in case of a CO41 malfunction due to misuse/abuse.
- If the customer has other essential performance than "no unintended movement", he must consider this in his own risk analysis. LINAK disclaims any liability.
- If the actuator or the control cable is removed from the control box, the cable lock must be applied. To ensure movement in this case, LINAK recommends to use quick release actuators in the application.
- To avoid cables from being damaged by pulling, LINAK recommends to make safe cabling. If movement is an essential performance, LINAK recommends to apply quick release actuators, for example, to ensure movement.
- To avoid thermal protection from being activated, do not exceed load specifications. If movement is an essential performance, LINAK recommends to apply quick release actuators, for example, to ensure movement.
- Sales must request a review of the products according to current cut-off limits.
- Push plugs fully into correct sockets and make sure that the plugs are completely inserted.
- Mount control box lid and close lid until locked in place.

Motor cable

Always use 6-wire cables.

Please note that angled motor cable plugs are required for connection to the control box.

Because of the half-bridge technology used in CO41 there is an interdependence between each half-bridge, CH1 + 2 and CH3 + 4. Half-bridge connected channels cannot run simultaneously in opposite directions. E.g. running a trend function using CH3 and CH4 will not be possible.

Warnings

- Use EPR or ensure that the user takes care not to squeeze the mains cable.
- Always check correct assembly after mounting and service to ensure that the cable lock is mounted. (Connectors are usually removed during cleaning)
- Always use approved chemicals with the housing as the plastic may show corrosion caused by some chemicals. As a result water may accumulate/gather in housing.
- Take special precautions concerning third party interfacing. Please contact LINAK for further information.
- Make a review of all product specifications before system set-up if the current cut-off limit is higher than the maximum allowed current cut-off for the actuator.
- To avoid cable interruption and actuator defects, make a proper cable installation and inspect regularly for wear and damage. Defective parts must be replaced.
- After service inspection, the application must be tested for correct functionality before it is put into operation to avoid actuator plugs being mixed during service. Operators must not be inside the entrapment area.
- To avoid electrical failure or system disturbance inspect regularly for wear and damage. Defective parts must be replaced.
- Make a proper cable installation to avoid short-circuit cables for handset/controls. Regular inspection must be made for wear and damage. Defective parts must be replaced.
- When using CO41 in combination with PJ2, the functionalities are reduced due to a limited flash size of 64 kB for CO41.
- Do not mount the actuator with the spindle facing downwards to avoid that the actuator slips off the bracket with mounted control box. The bracket can come loose when exposed to shock or hard vibrations, for instance when passing doorsteps. Regular inspection must be made to ensure proper fixation of control box and bracket on actuator.

CO53



The LINAK® control box CO53 is a new member of the OpenBus™ range. The control box offers a 190 Watt power supply, a small and compact design and the ability to handle multiple hand controls or other OpenBus accessories for applications with a need for more advanced features.

Usage

Operation temperature:	+5 °C to +40 °C
Storage temperature:	-10 °C to +50 °C
Relative humidity:	20% - 80% not condensing
Atmospheric pressure:	700 to 1060 hPa
Meters above sea level:	Max. 3000 meters
Duty cycle:	10% - 2/18 min. on/off continuous use

Mains supply grid should be limited to the highest prospective short circuit current:

100-240 VAC: 1500 A

230-240 VAC: 35 A

Demands to mains supply safety for the application in accordance with IEC 60601-1 ed. 3.2, § 8.11.5

Approvals:	IEC60601-1 ANSI/AAMI ES60601-1 CSA CAN/CSA-C22.2 NO. 60601-1

LED indicator



CO53 is equipped with a green LED for indication of mains power connection and an orange LED for indication of hand or foot control activation.

When the CO53 is connected to mains, the LED is green and when connected to battery, the LED is off.

Connected to MAINS	
LED colour	**Indication of operation**
Green	**On mains, not activated by hand or foot control.** The system is working ok and is ready for normal operation
Green and orange	**On mains, not activated by hand or foot control.** The system is defective and should not be operated.
Green and orange	**On mains, activated by hand or foot control.** The system is working.

Not connected to mains but with BATTERY back-up	
LED colour	**Indication of operation**
Orange	**On battery, activated by hand or foot control.** The system is working
No LED	**On battery, not activated by hand or foot control.** or CO53 not connected to mains

Acoustic signal functionality

The buzzer will make a warning, when a button on the hand control is pressed, and the battery state of charge is low. The buzzer can also be activated by the control box to signal other conditions. This must be specified in the control box software.

Mounting

For mounting on a LINAK actuator (LA27, LA31 or LA40), a mounting bracket is required.

Dimensions – mounted with LA40

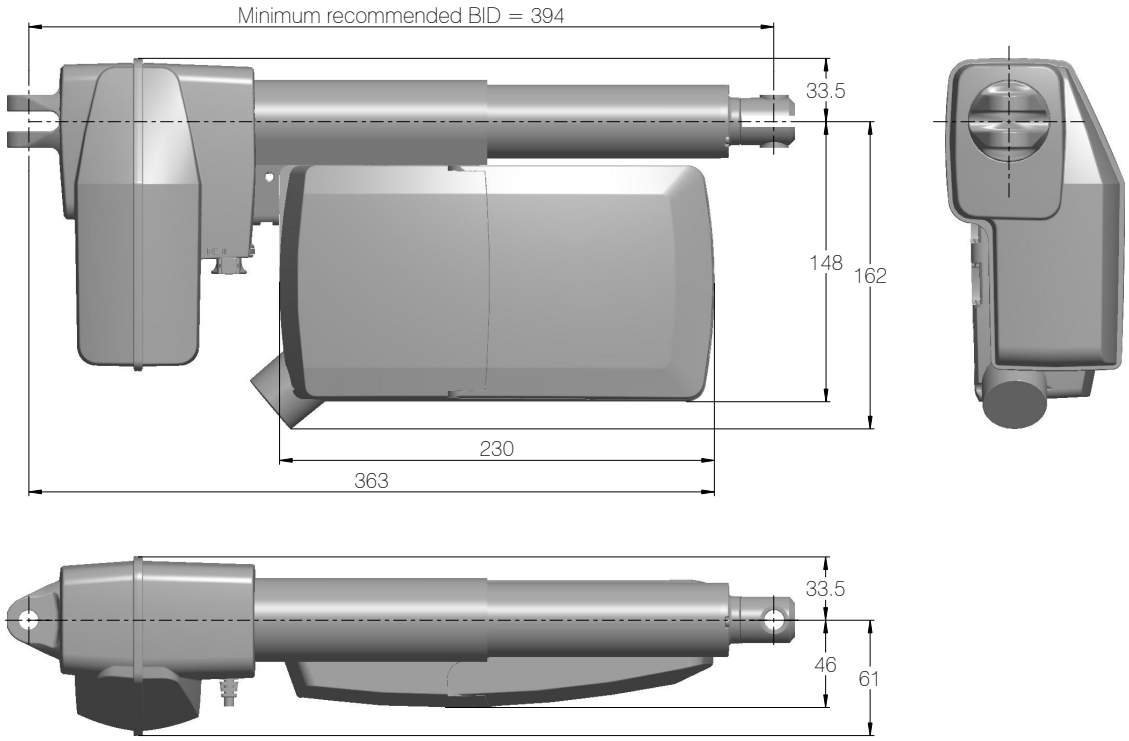

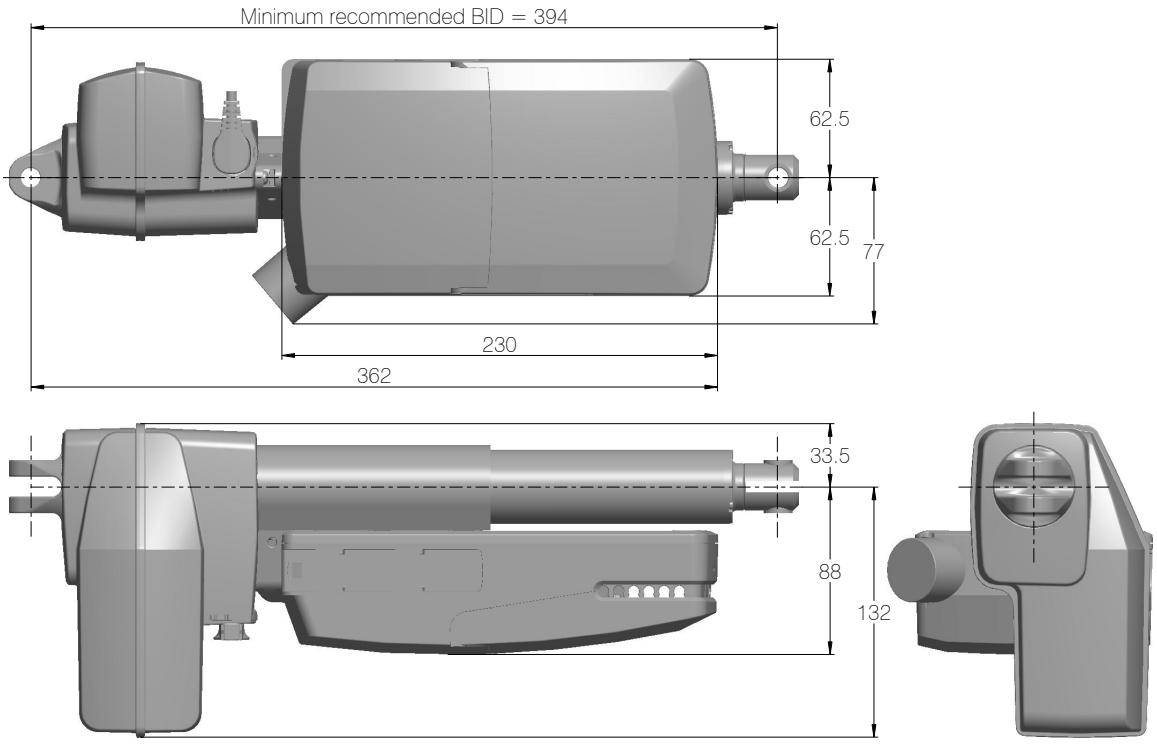

Drawing No.: 1015W4018

Dimensions – mounted with LA31

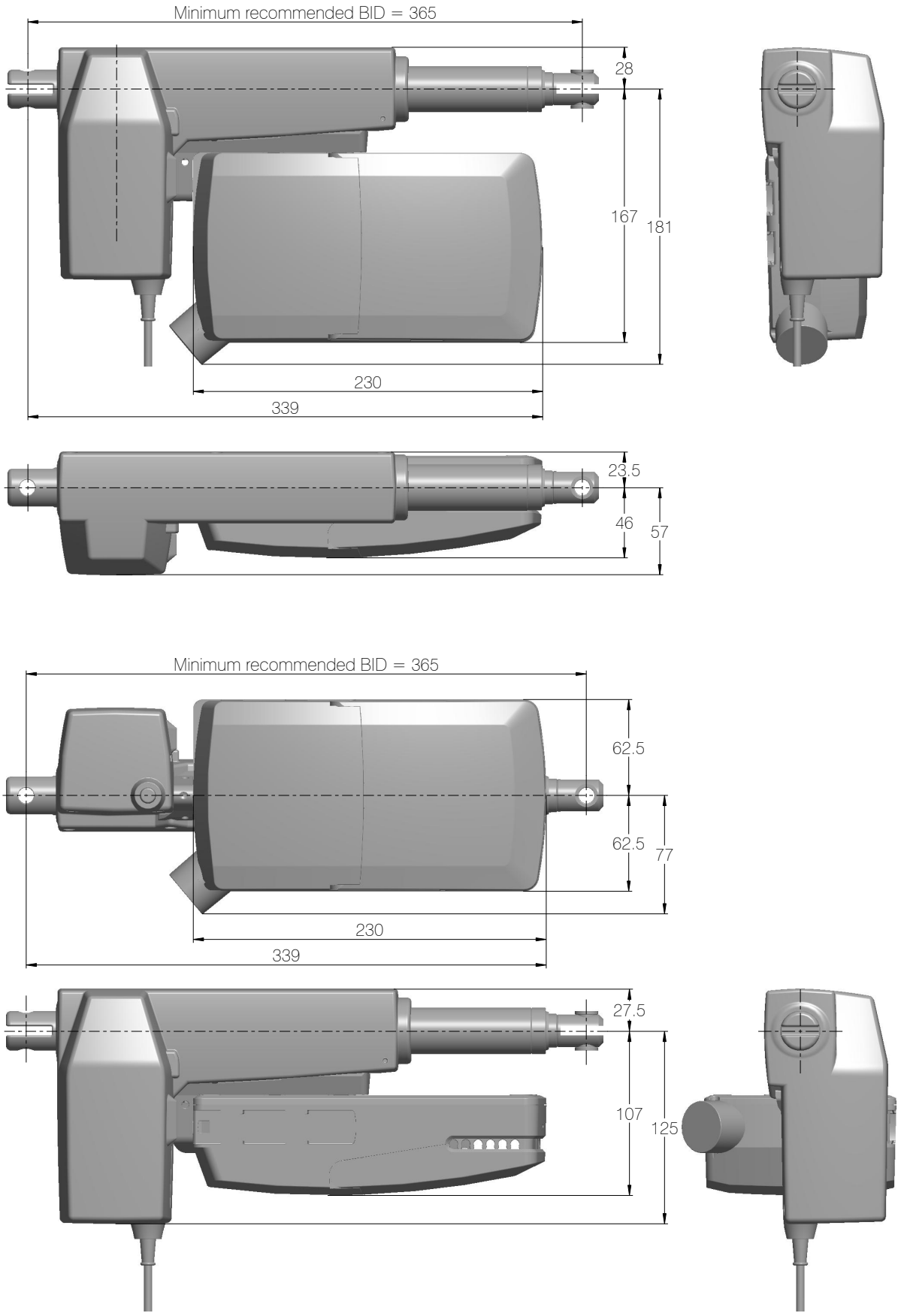

Drawing No.: 1015W4017

Dimensions – mounted with LA27

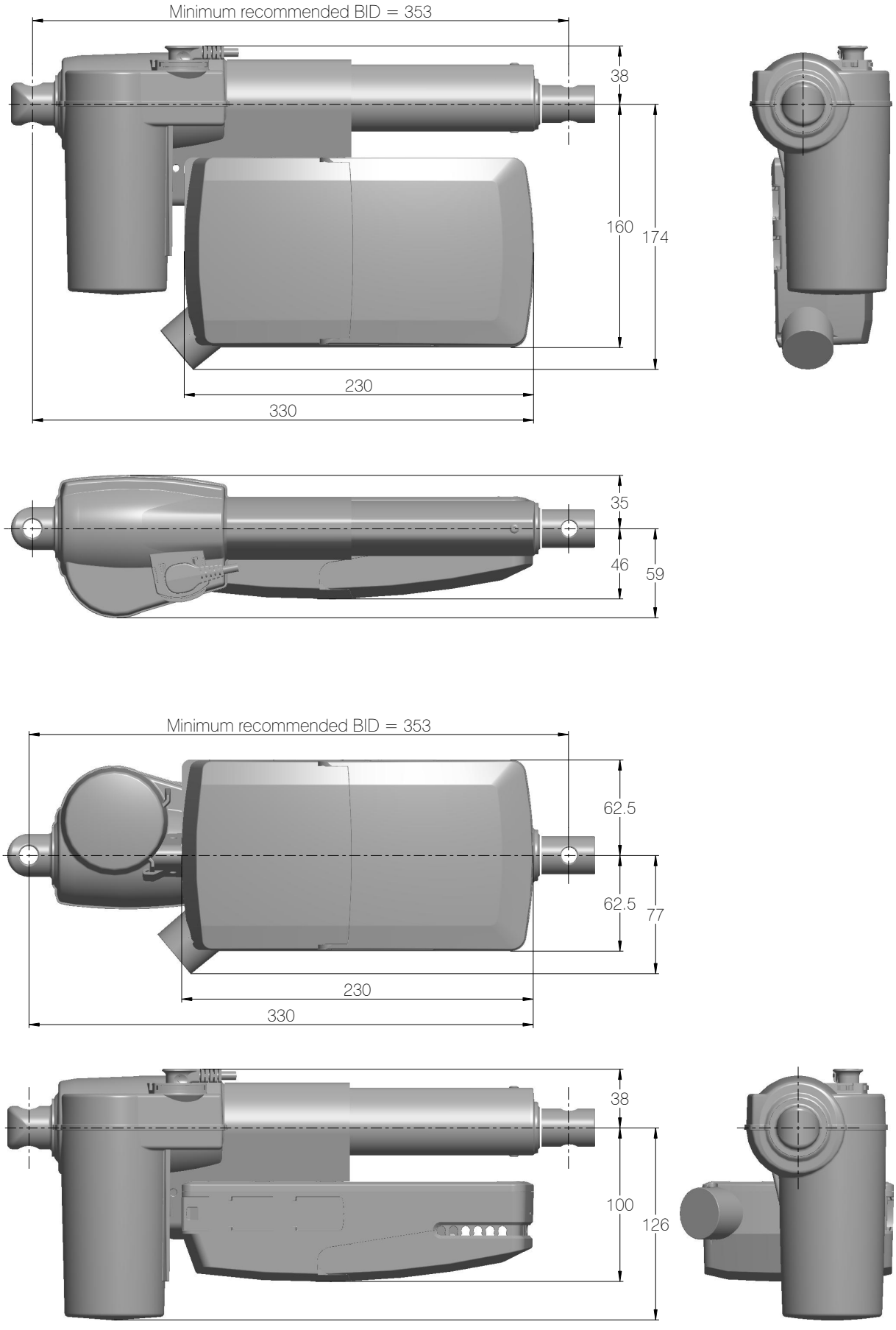

Drawing No.: 1015W4016

Mounting brackets

For mounting with LA40

Article No.: 1015W1002

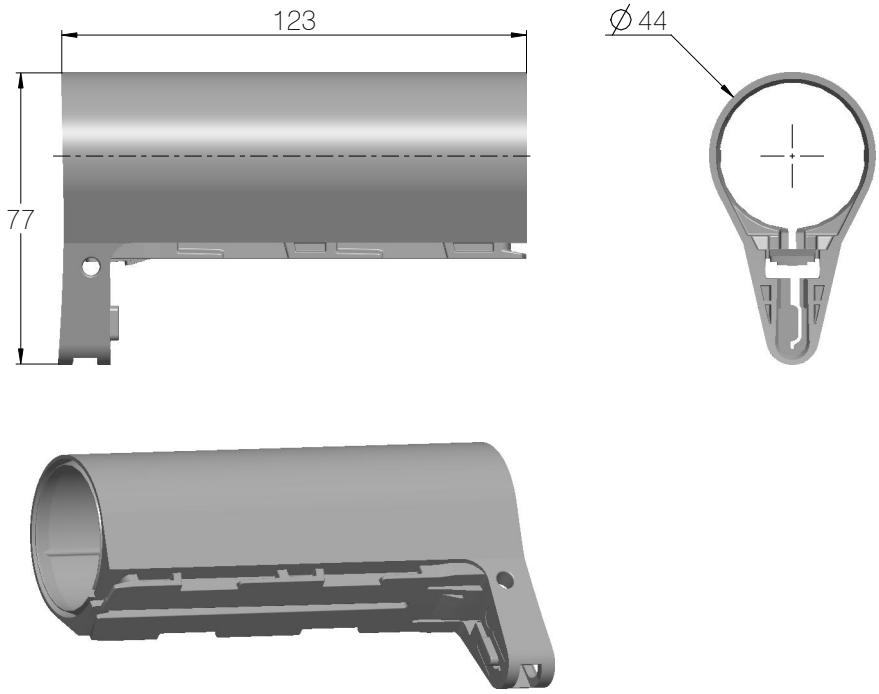

Drawing No.: 1015W4002

For mounting with LA31

Article No.: 1015W1004

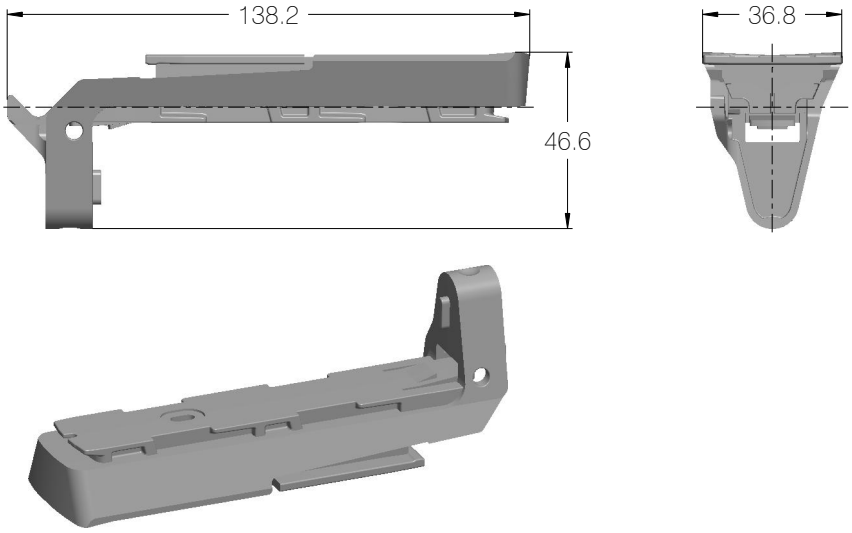

Drawing No.: 1015W4004

For mounting with LA27

Article No.: 1015W9003

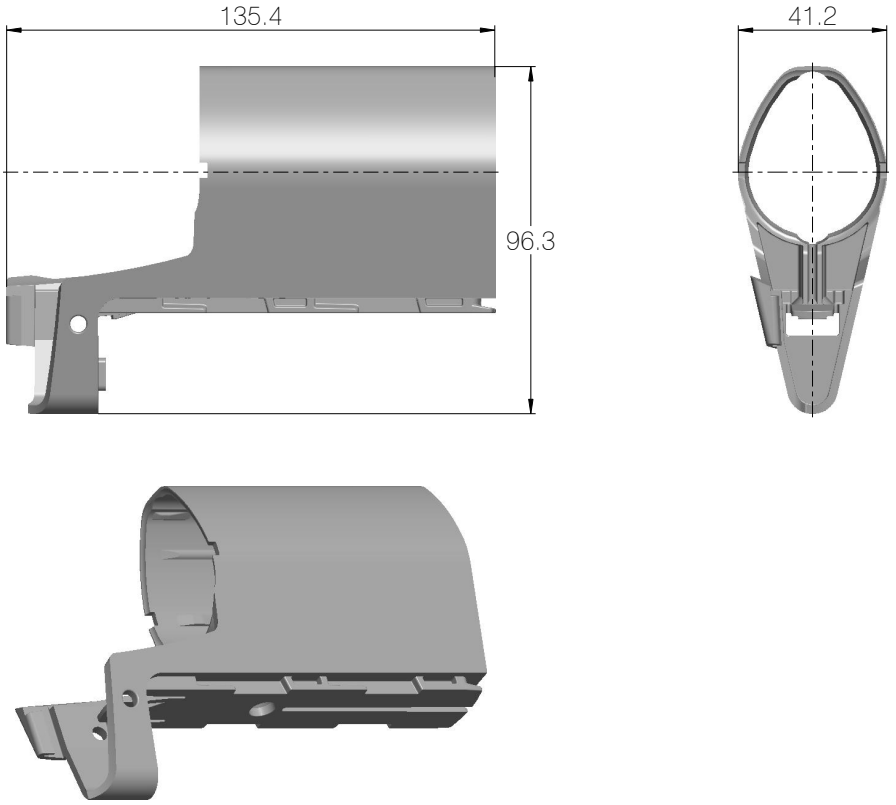

Drawing No: 1015W4003

The adapter 1015W9003 includes a screw that is halfway mounted, thus everything as one part.

Screw head torx size: T15
Screw torque: 1.2 ± 0.2 Nm

Mounting bracket (frame flat)

Article No. 1015W1001

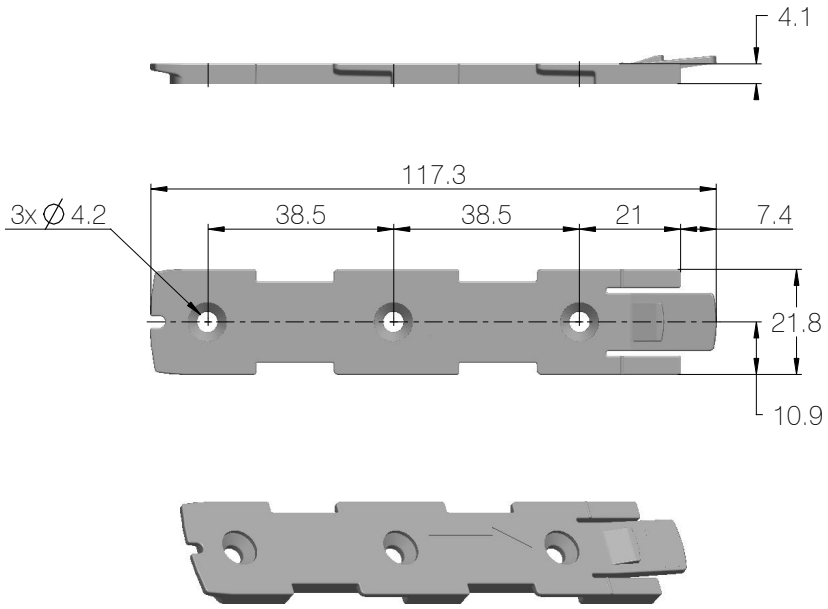

Drawing No.: 1015W4001

Mounting bracket (frame flat) w/M4 nuts

Article No. 1015W9009

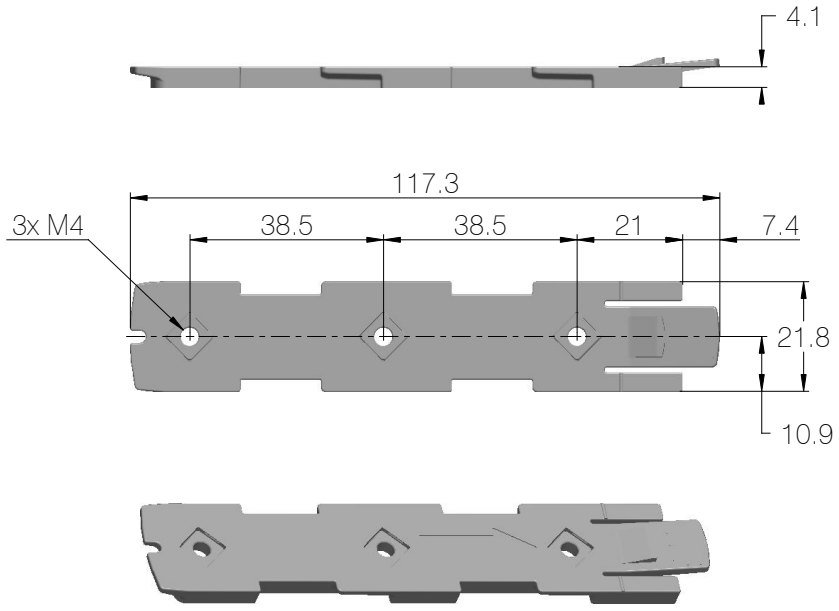

Drawing No.: 1015W4009

Screw bracket spacer

Article No. 1015W1001

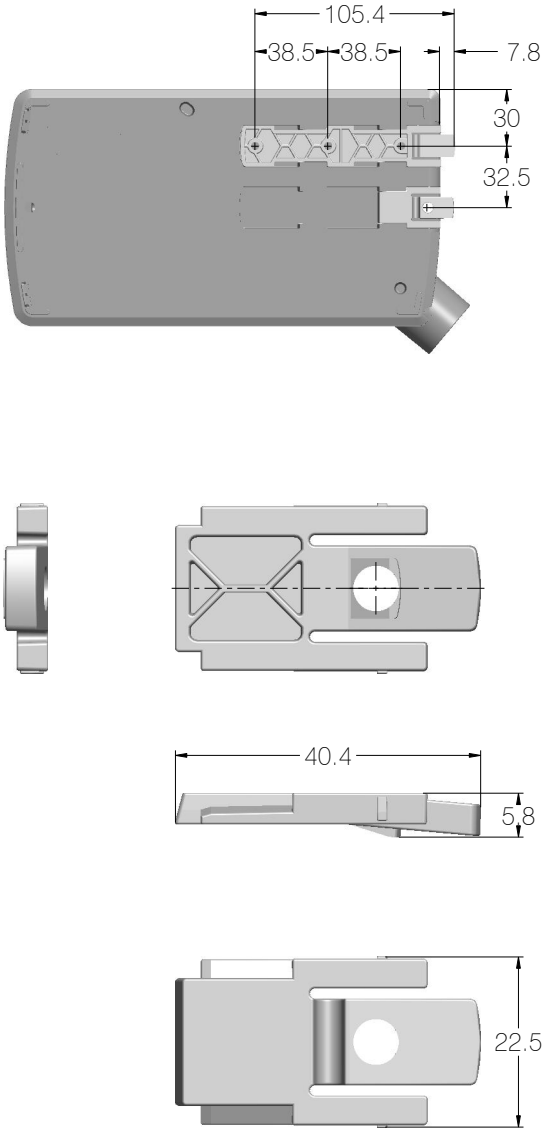

Drawing No.: 1054W4001

Mounted on frame

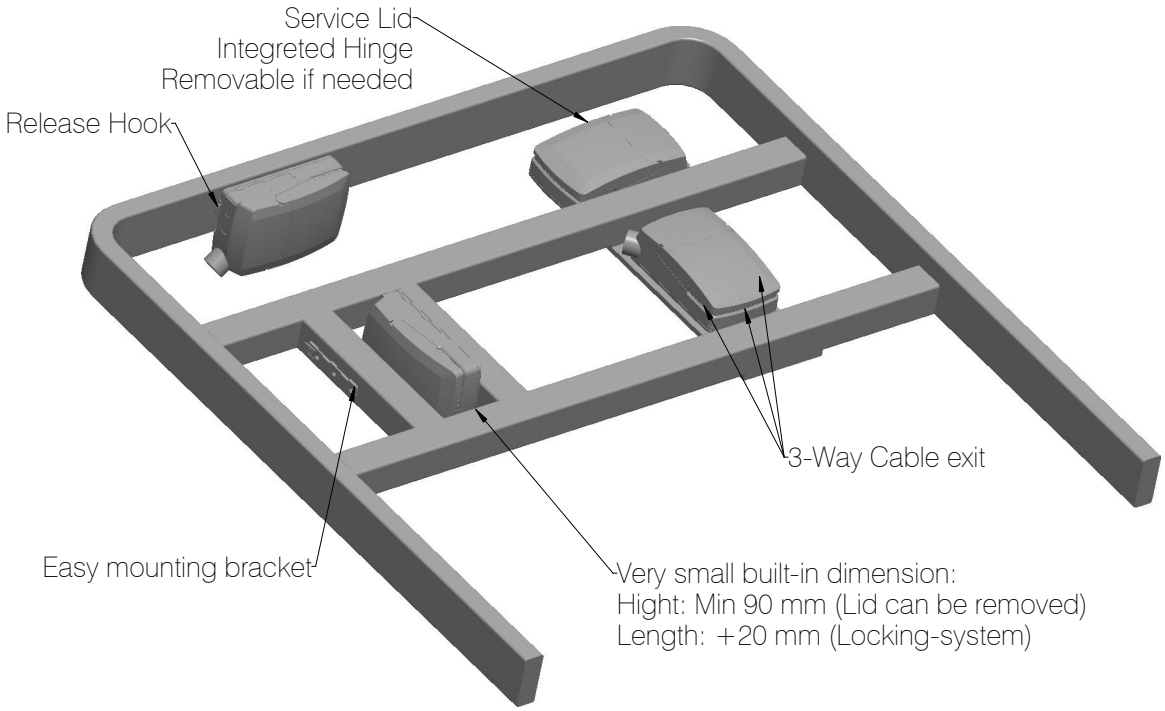

Drawing No.: 1013W4008

Mounting instructions

When mounting the control box onto the actuator (1)

Simply slide on the bracket until you hear a clear click (2)

Slide on the control box until you hear a click and the box is mounted (3)

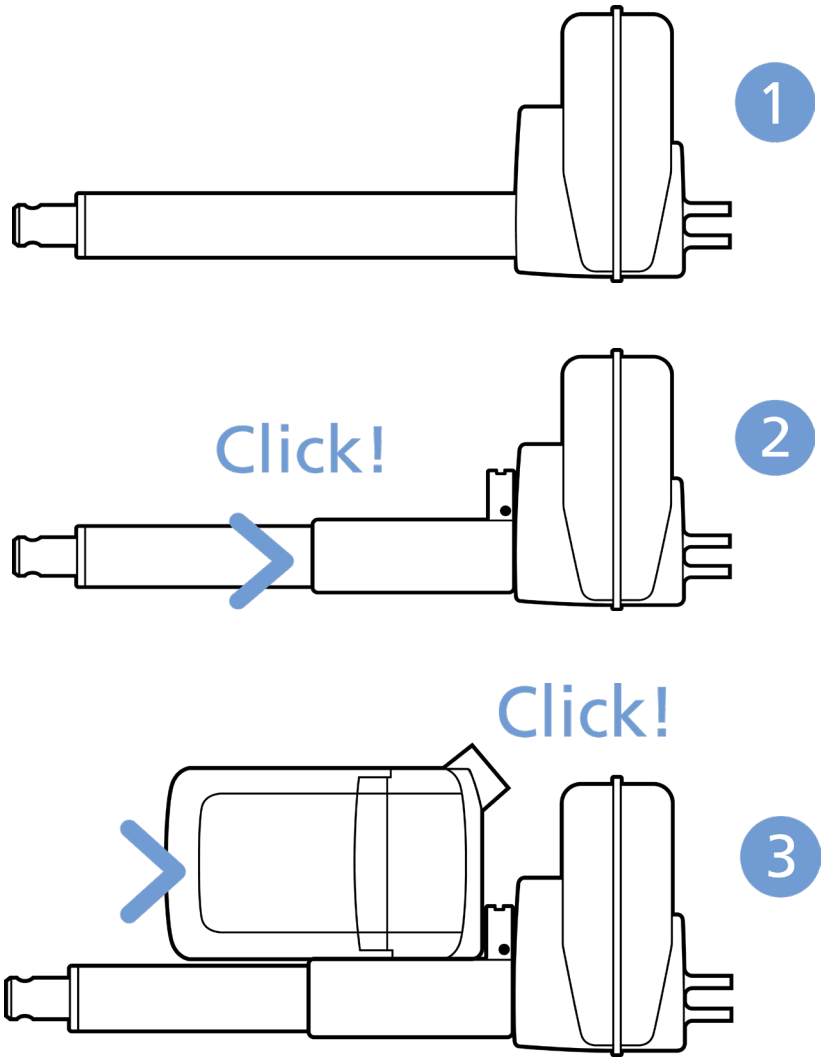

It is recommended to mount the CO53 in a position that allows water to escape.

Recommended torque: 0.6Nm +/-0.1

The bracket can be mounted to the bed frame or any other application by following one of the following mounting procedures:

1. M6 nut to be placed in bracket and fixed with M6 bolt from the rear side.
2. M5 machine screw with flat washer to be fixed through bracket with nut on the rear side
3. Self-tapping screw to be placed through bracket and onto the frame

Mounting of cables and cable lock

CO53 has a uniquely designed cable lid. The lid also works as an integrated cable lock when closed.

1. Mount cable plugs in control box
2. Close lid until lock snaps into place (see arrows)

To allow free access to the cables, the lid has a rest position when completely opened.

It is possible to remove the lid by lifting it a few degrees and pulling it away from the housing under tight mounting conditions.

Cable management

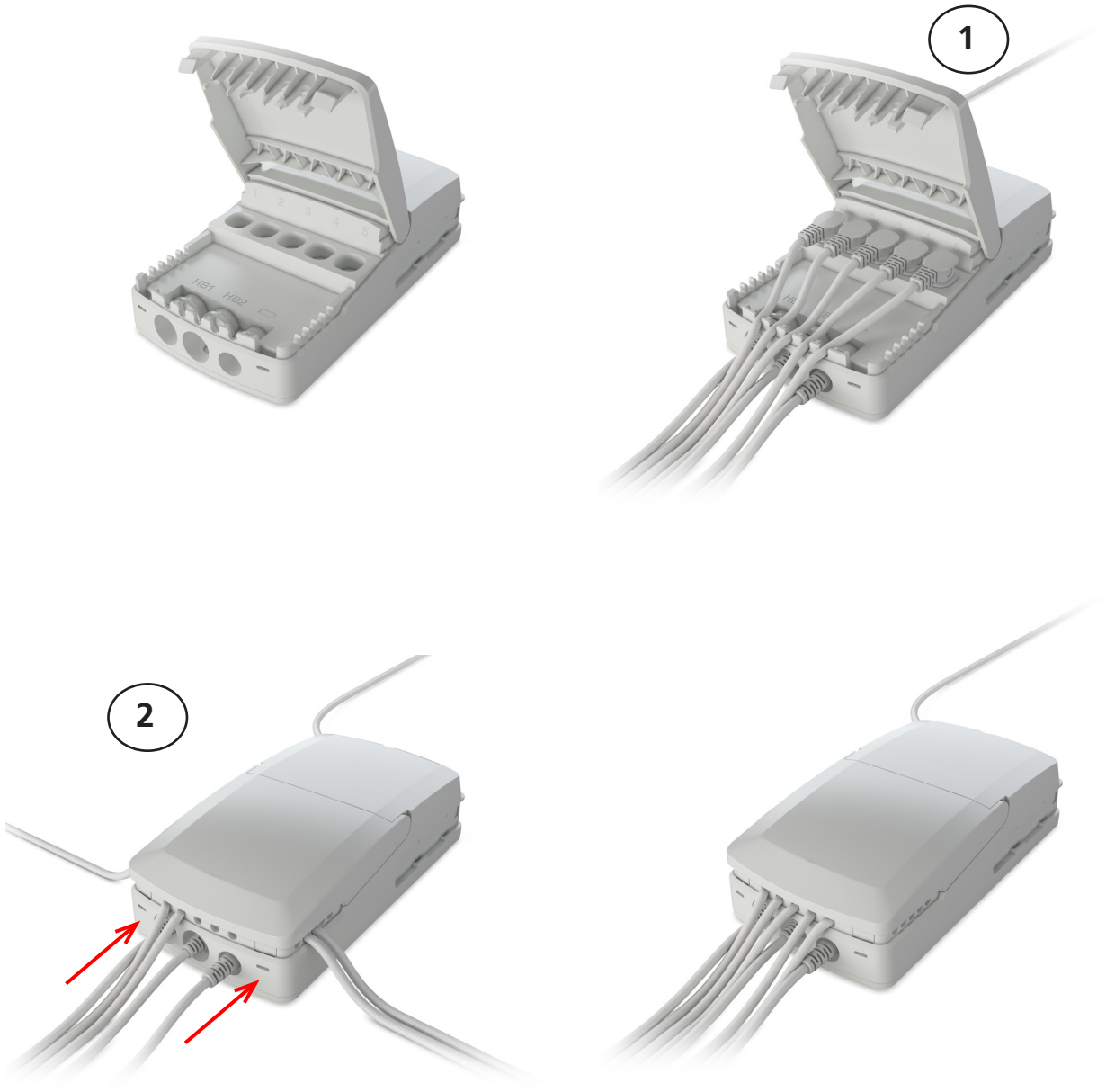

Recommendations

- To avoid unintended activation of actuators if hand control cables short-circuit, LINAK® recommends to use an OpenBus™ system (CO53).
- If there is a risk that the system is overloaded and therefore shuts down thermally, LINAK recommends to use quick release actuators. These will allow functions to be lowered manually in case of a CO53 malfunction due to misuse/abuse.
- If the customer has other essential performance than "no unintended movement", he must consider this in his own risk analysis. LINAK disclaims any liability.
- If the actuator or the control cable is removed from the control box, the cable lock must be applied. To ensure movement in this case, LINAK recommends to use quick release actuators in the application.
- To avoid cables from being damaged by pulling, LINAK recommends to make safe cabling. If movement is an essential performance, LINAK recommends to apply quick release actuators, for example, to ensure movement.
- To avoid thermal protection from being activated, do not exceed load specifications. If movement is an essential performance, LINAK recommends to apply quick release actuators, for example, to ensure movement.
- Sales must request a review of the products according to current cut-off limits.
- Push plugs fully into correct sockets and make sure that the plugs are completely inserted.
- Mount control box lid and close lid until locked in place.
- When mounting the CO53 using the two screw holes, you must use the spacer. This is to avoid the CO53 housing from breaking that can lead to malfunction and lower IP ratings.

Motor cable

Always use 6-wire cables.

Please note that angled motor cable plugs are required for connection to the control box.

Warnings

- Use EPR or ensure that the user takes care not to squeeze the mains cable.
- Always check correct assembly after mounting and service to ensure that the cable lock is mounted. (Connectors are usually removed during cleaning)
- Always use approved chemicals with the housing as the plastic may show corrosion caused by some chemicals. As a result water may accumulate/gather in housing.
- Take special precautions concerning 3rd party interfacing. Please contact LINAK® for further information.
- Make a review of all product specifications before system set-up if the current cut-off limit is higher than the maximum allowed current cut-off for the actuator.
- To avoid cable interruption and actuator defects make a proper cable installation and inspect regularly for wear and damage. Defective parts must be replaced.
- After service inspection, the application must be tested for correct functionality before it is put into operation to avoid actuator plugs being mixed during service. Operators must not be inside entrapment area.
- To avoid electrical failure or system disturbance inspect regularly for wear and damage. Defective parts must be replaced.
- Make a proper cable installation to avoid short-circuit cables for handset/controls. Regular inspection must be made for wear and damage. Defective parts must be replaced.
- Do not mount the actuator with the spindle facing downwards to avoid that the actuator slips off the bracket with mounted control box. The bracket can come loose when exposed to shock or hard vibrations, for instance when passing doorsteps. Regular inspection must be made to ensure proper fixation of control box and bracket on actuator.

CO61 MK2



The LINAK® control box CO61 offers a consolidated range of unprecedented features – all utilising standardised technology, interfaces and compatibility.

The CO61 for LINAK actuators is intended for the control of, for example, hospital bed movement.

Equipped with 200W SMPS, Bluetooth® Low Energy, excellent and well thought-out cable management as well as multiple easy mounting options, this control box opens up a wide range of application possibilities for the provident hospital and care products manufacturer.

Usage

Operation temperature:	+5 °C to +40 °C
Storage temperature:	-10 °C to +50 °C
Relative humidity:	20% to 80% - non-condensing
Atmospheric pressure:	700 to 1060 hPa (3000 m)
Meters above sea level:	Max. 3000 meters
Duty cycle:	10 % - 2/18 min. on/off continuous use Maximum power is 200 W for 80 seconds and 100 W for 40 seconds at 25 °C.

Mains supply grid should be limited to the highest prospective short circuit current of 1500 A.

Demands to mains supply safety for the application in accordance with IEC 60601-1 ed. 3.2, § 8.11.5

Approvals:	IEC60601-1 edition 3.1 ANSI/AAMI ES60601-1:2005/(R) 2012 CSA CAN/CSA-C22.2 NO. 60601-1:14 PSE Japan

LED indicator



CO61 is equipped with a green LED for indication of mains power connected. When the CO61 is connected to mains, the LED is green. Connected only to battery, the LED is off.

Connected to MAINS	
LED colour	**Indication of operation**
Green	**On mains, not activated by hand or foot control.** The system is working ok and is ready for normal operation
Yellow	**On mains, not activated by hand or foot control.** The system is defective and should not be operated.
Yellow	**On mains, activated by hand or foot control.** The system is working.

Not connected to mains but with BATTERY back-up	
LED colour	**Indication of operation**
Orange	**On battery, activated by hand or foot control.** The system is working
No LED	**On battery, not activated by hand or foot control** or CO61 not connected to mains

Acoustic signal functionality

The buzzer will make a warning, when a button on the hand control is pressed, and the battery state of charge is low. The buzzer can also be activated by the control box to signal other conditions. This must be specified in the control box software.

Mounting

For mounting on a LINAK actuator (LA27, LA31 or LA40), a mounting bracket is required.

Dimensions – mounted with LA40

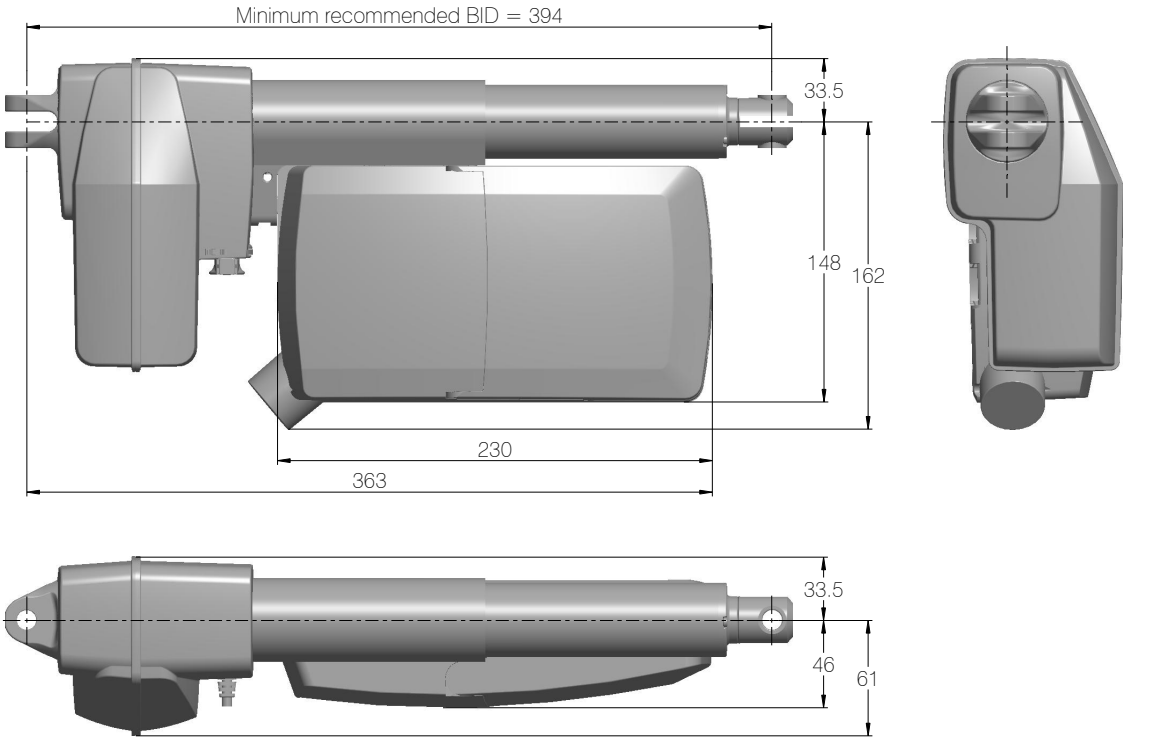

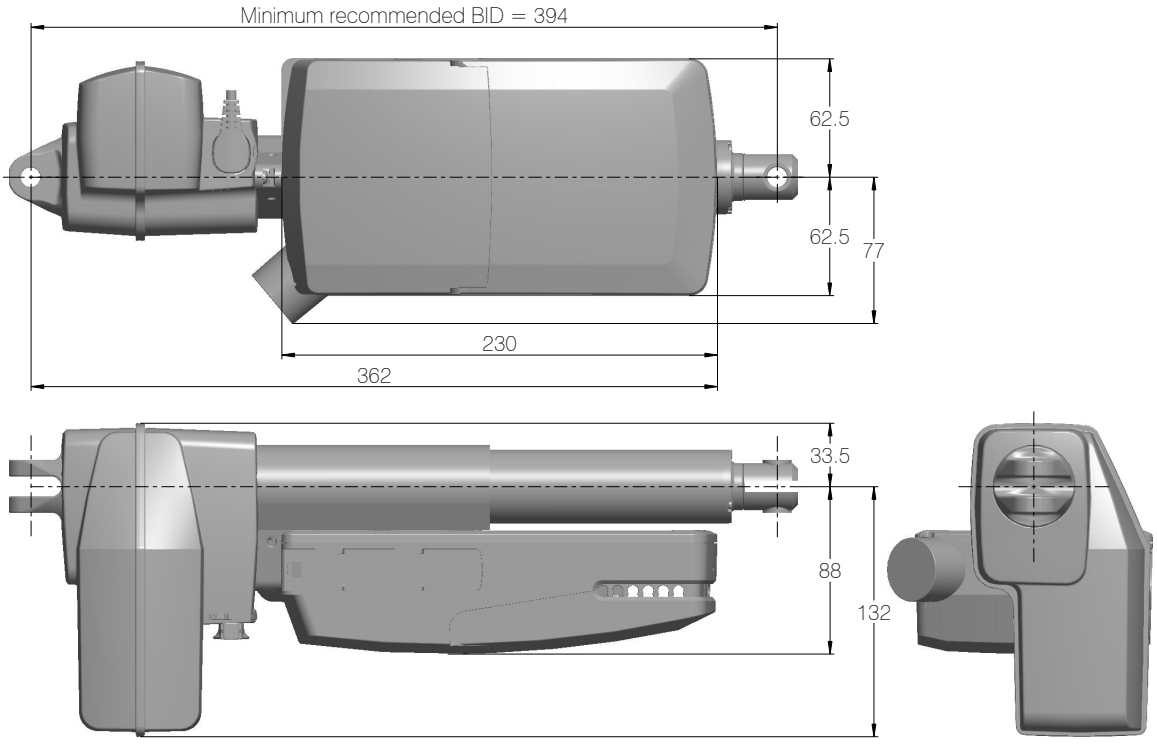

Drawing No.: 1015W4018

Dimensions – mounted with LA31

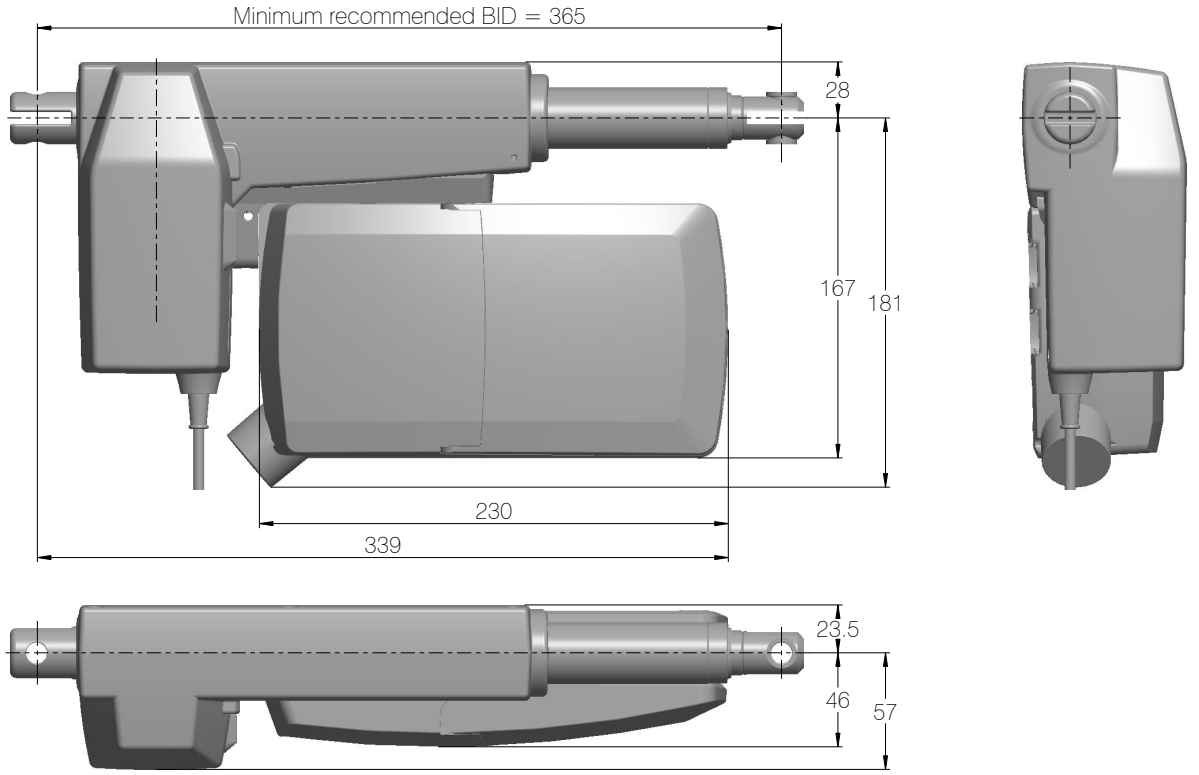

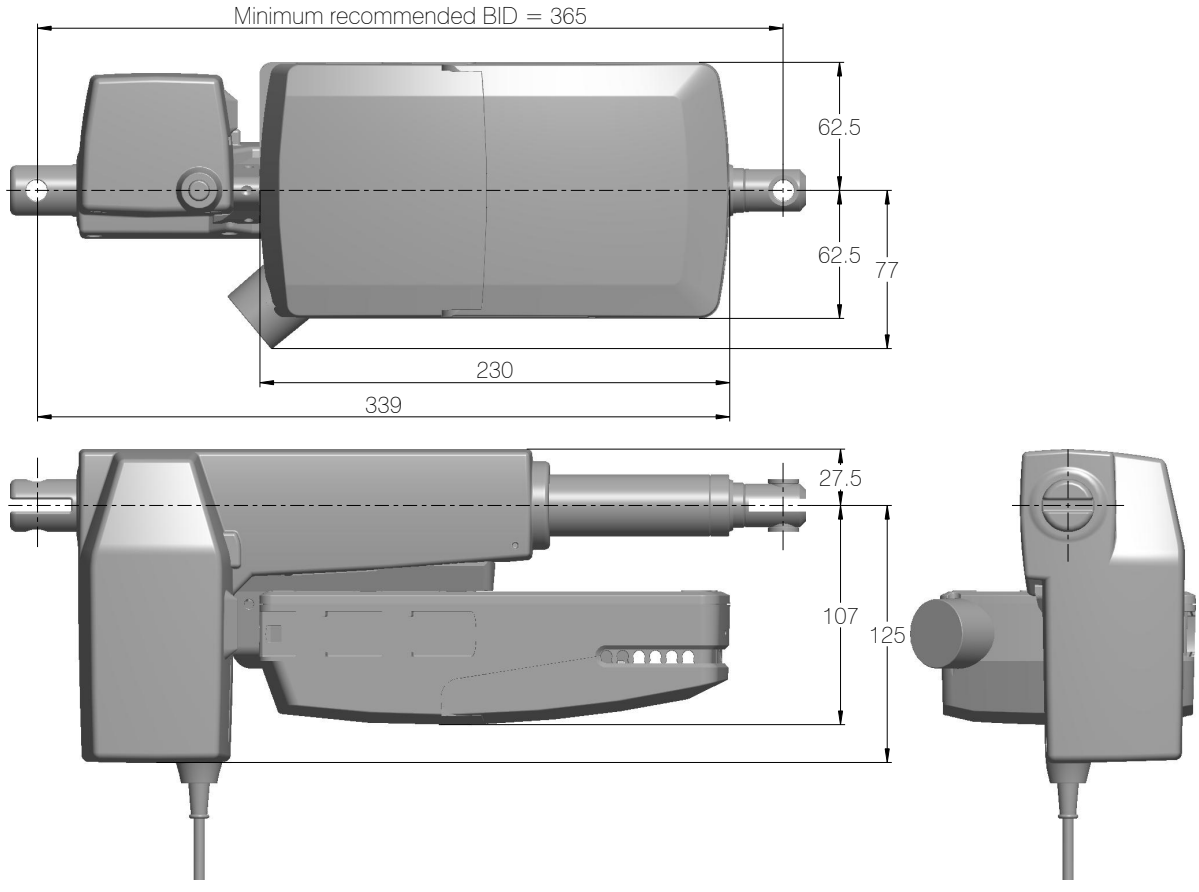

Drawing No.: 1015W4017

Dimensions – mounted with LA27

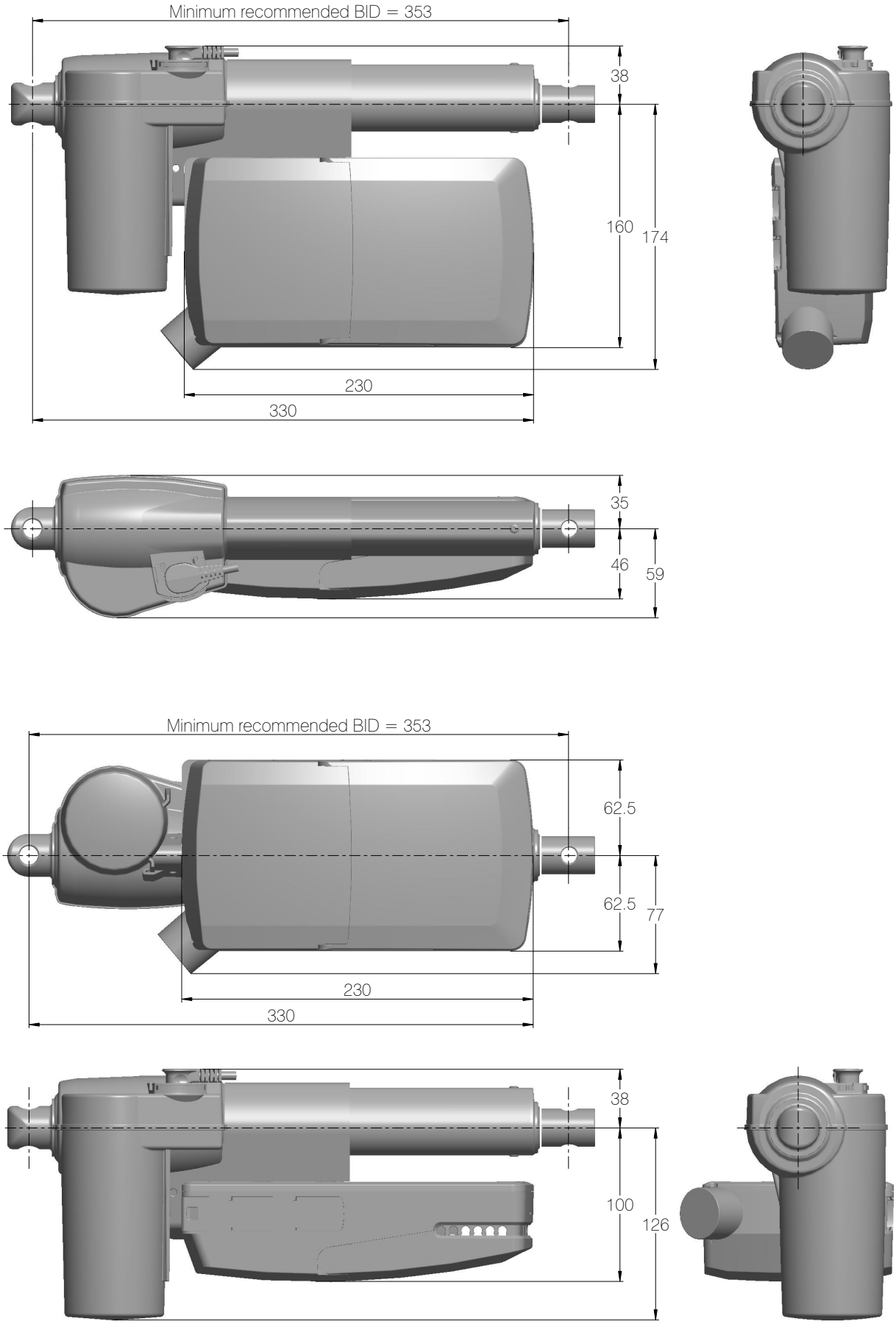

Drawing No.: 1015W4016

Mounting brackets

For mounting with LA40

Article No.: 1015W1002

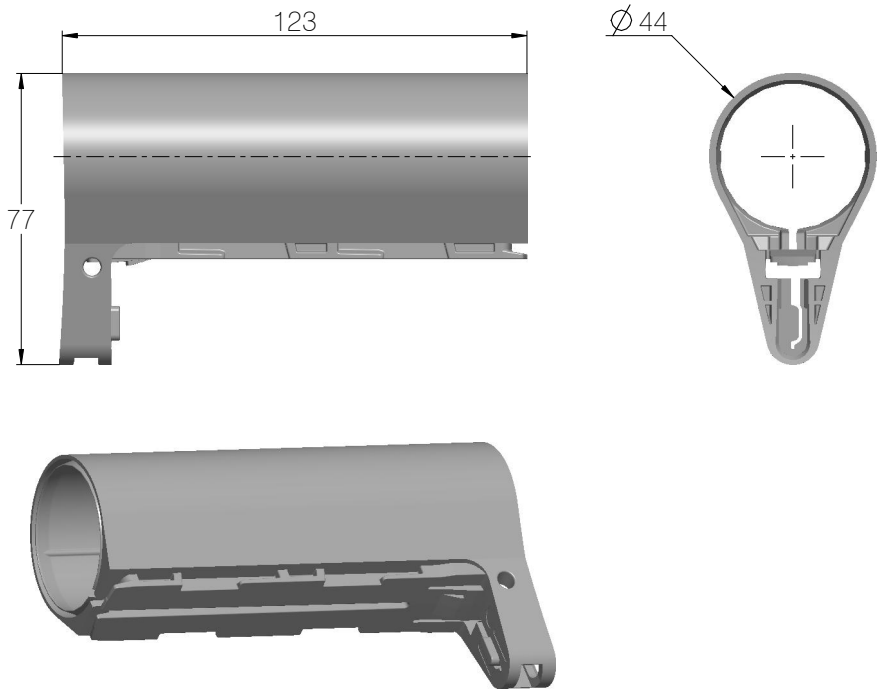

Drawing No.: 1015W4002

For mounting with LA31

Article No.: 1015W1004

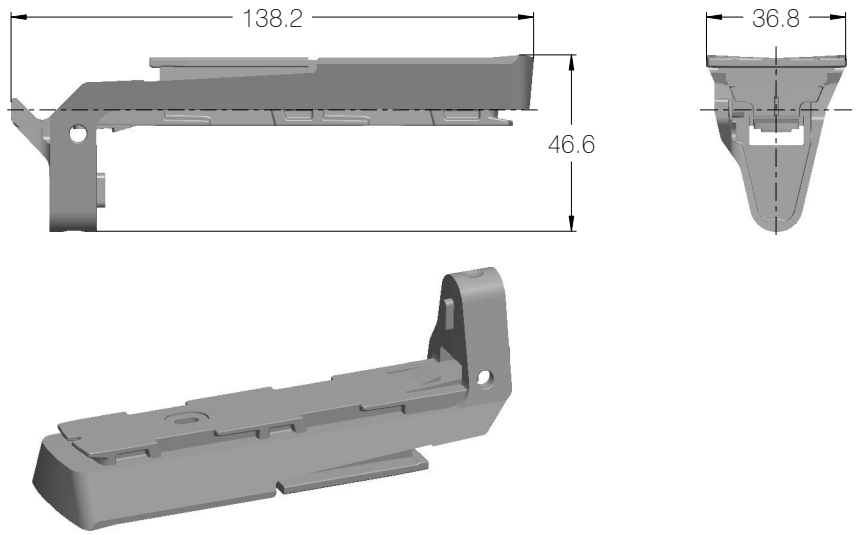

Drawing No.: 1015W4004

For mounting with LA27

Article No.: 1015W9003

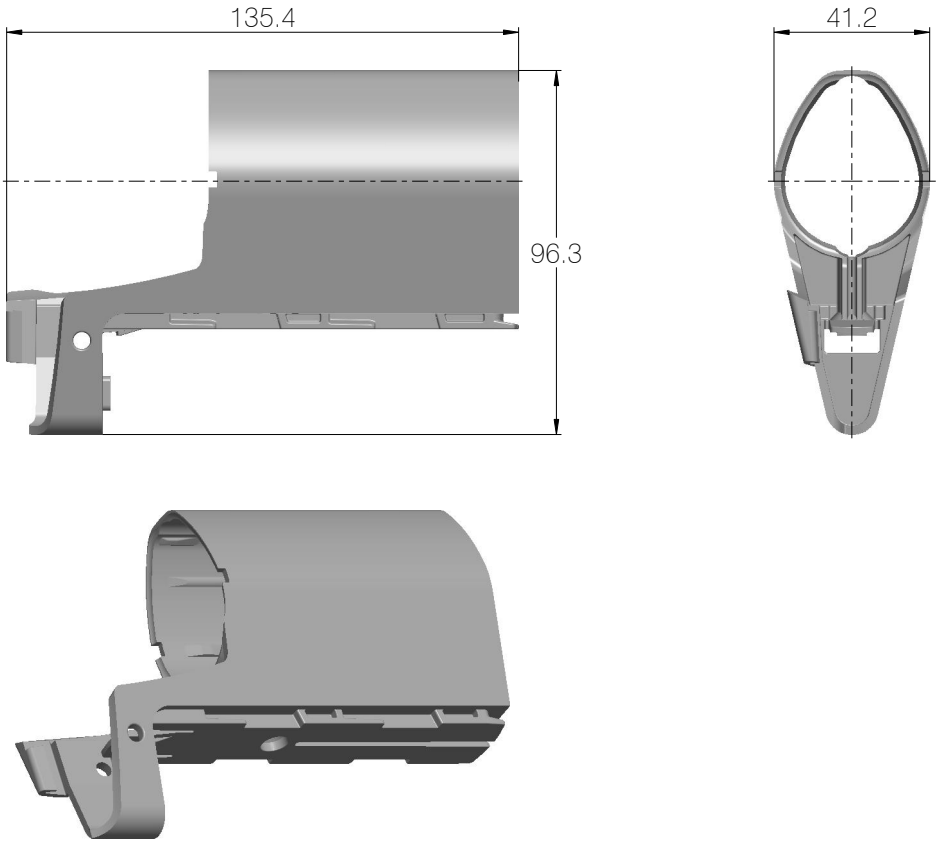

Drawing No: 1015W4003

The adapter 1015W9003 includes a screw that is halfway mounted, thus everything as one part.

Screw head torx size: T15

Screw torque: 1.2 ± 0.2 Nm

Mounting bracket (frame flat)

Article No. 1015W1001

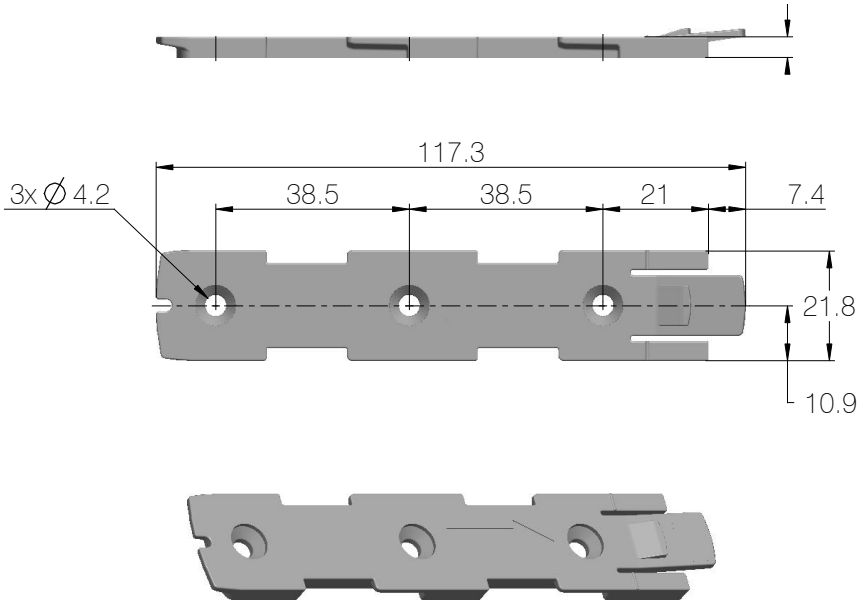

Drawing No.: 1015W4001

Mounting bracket (frame flat) w/M4 nuts

Article No. 1015W9009

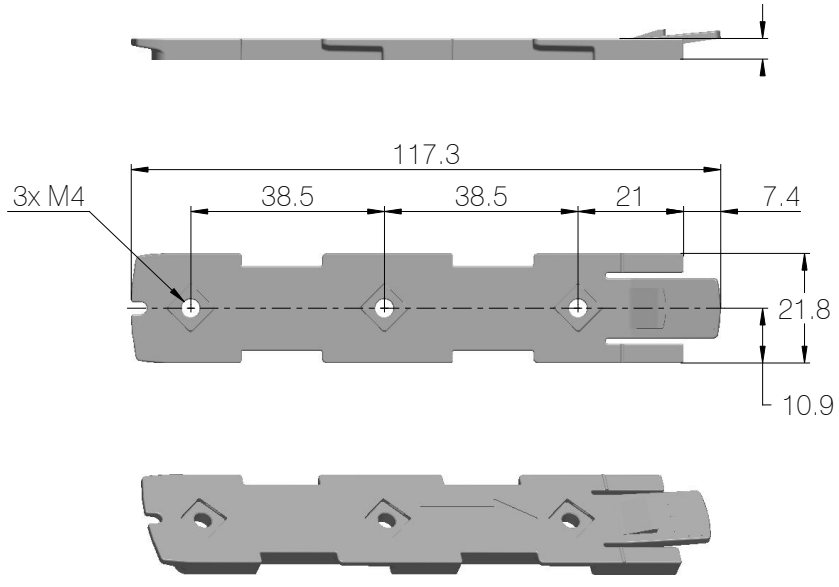

Drawing No.: 1015W4009

Mounted on frame

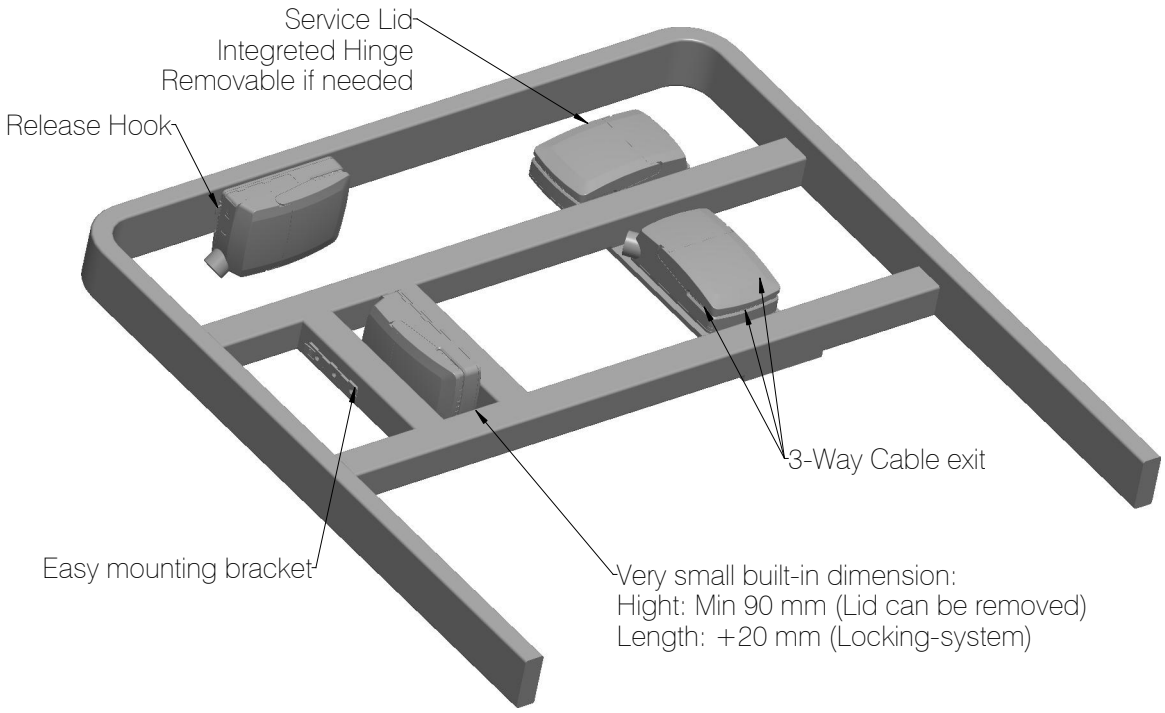

Drawing No.: 1013W4008

Mounting instructions

When mounting the control box onto the actuator (1)

Simply slide on the bracket until you hear a clear click (2)

Slide on the control box until you hear a click and the box is mounted (3)

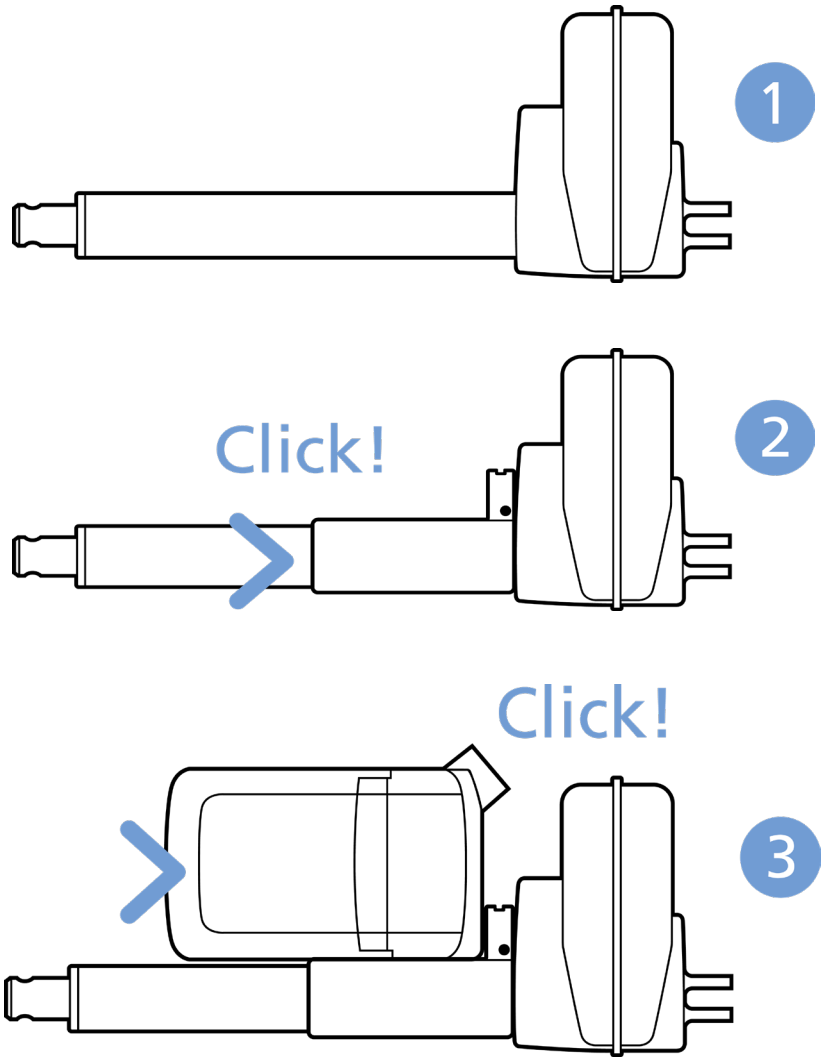

It is recommended to mount the CO61 MK2 in a position that allows water to escape.

Recommended torque: 0.6Nm +/-0.1

The bracket can be mounted to the bed frame or any other application by following one of the following mounting procedures:

1. M6 nut to be placed in bracket and fixed with M6 bolt from the rear side
2. M5 machine screw with flat washer to be fixed through bracket with nut on the rear side
3. Self-tapping screw to be placed through bracket and onto the frame

Mounting of cables and cable lock

CO61 MK2 has a uniquely designed cable lid. The lid also works as an integrated cable lock when closed.

1. Mount cable plugs in control box
2. Close lid until lock snaps into place (see arrows)

To allow free access to the cables, the lid has a rest position when completely opened.

It is possible to remove the lid by lifting it a few degrees and pulling it away from the housing under tight mounting conditions.

Cable management



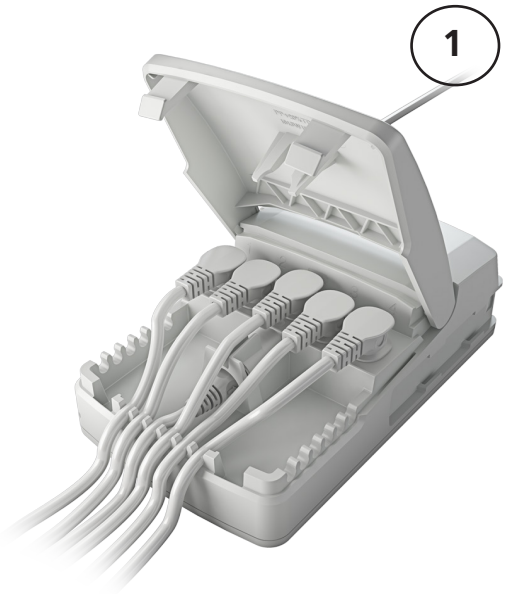

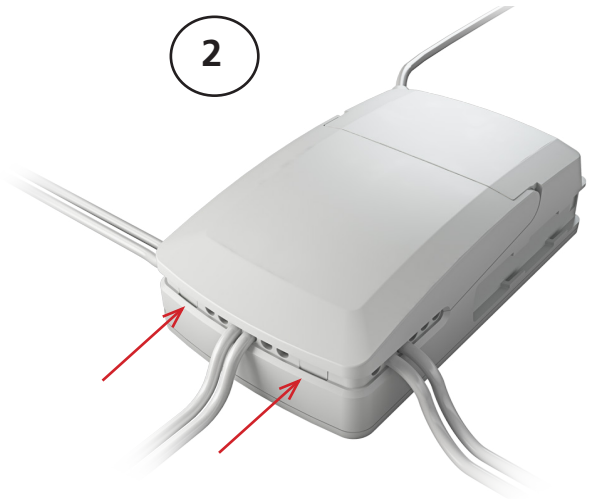

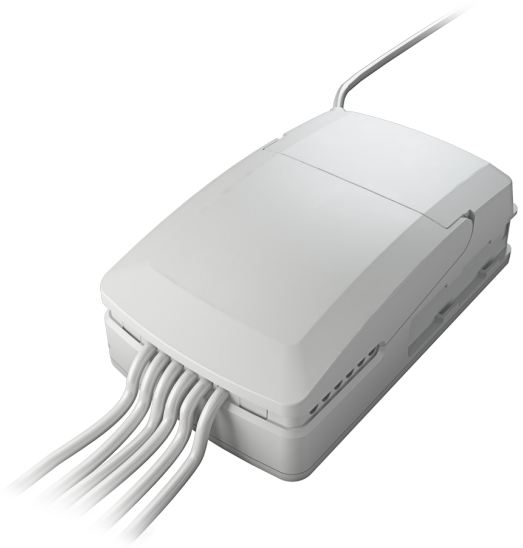

Recommendations

- To avoid unintended activation of actuators if hand control cables short-circuit, LINAK recommends to use an OpenBus system (CO61 MK2).
- If there is a risk that the system is overloaded and therefore shuts down thermally, LINAK recommends to use quick release actuators. These will allow functions to be lowered manually in case of a CO61 MK2 malfunction due to misuse/abuse.
- If the customer has other essential performance than 'no unintended movement', he must consider this in his own risk analysis. LINAK disclaims any liability.
- If the actuator or the control cable is removed from the control box, the cable lock must be applied. To ensure movement in this case, LINAK recommends to use quick release actuators in the application.
- To avoid cables from being damaged by pulling, LINAK recommends to make safe cabling. If movement is an essential performance, LINAK recommends to apply quick release actuators, for example, to ensure movement.
- To avoid thermal protection from being activated, do not exceed load specifications. If movement is an essential performance, LINAK recommends to apply quick release actuators, for example, to ensure movement.
- Sales must request a review of the products according to current cut-off limits.
- Push plugs fully into correct sockets and make sure that the plugs are completely inserted.
- Mount the control box lid and close it until locked in place.

Motor cable

Always use 6-wire cables.

Please note that angled motor cable plugs are required for connection to the control box.

Warnings

- Use EPR or ensure that the user takes care not to squeeze the mains cable.
- Always check correct assembly after mounting and service to ensure that the cable lock is mounted. (Connectors are usually removed during cleaning)
- Always use approved chemicals with the housing as the plastic may show corrosion caused by some chemicals. As a result water may accumulate/gather in housing.
- Take special precautions concerning 3rd party interfacing. Please contact LINAK for further information.
- Make a review of all product specifications before system set-up if the current cut-off limit is higher than the maximum allowed current cut-off for the actuator.
- To avoid cable interruption and actuator defects make a proper cable installation and inspect regularly for wear and damage. Defective parts must be replaced.
- After service inspection, the application must be tested for correct functionality before it is put into operation to avoid actuator plugs being mixed during service. Operators must not be inside entrapment area.
- To avoid electrical failure or system disturbance inspect regularly for wear and damage. Defective parts must be replaced.
- Make a proper cable installation to avoid short-circuit cables for handset/controls. Regular inspection must be made for wear and damage. Defective parts must be replaced.
- Do not mount the actuator with the spindle facing downwards to avoid that the actuator slips off the bracket with mounted control box. The bracket can come loose when exposed to shock or hard vibratio, for instance when passing doorsteps. Regular inspection must be made to ensure proper fixation of control box and bracket on actuator.
- If using Bluetooth Low Energy controls, pay attention to stay within viewing distance.

CO65



The LINAK® control box CO65 offers a consolidated range of unprecedented features – all utilising standardised technology, interfaces and compatibility.

The CO65 for LINAK actuators is intended for the control of, for example, hospital bed movement.

Equipped with 280 W SMPS, excellent and well thought-out cable management as well as multiple easy mounting options, this control box pens up a wide range of application possibilities for the provident hospital and care products manufacturer.

Usage

Operation temperature:	+5 °C to +40 °C
Storage temperature:	-10 °C to +50 °C
Relative humidity:	20% - 80% - non-condensing
Atmospheric pressure:	700 to 1060 hPa
Meters above sea level:	Max. 3000 meters
Duty cycle	10% - 2/18 min. on/off continuous use SMPS load profile: 80 sec./280 W + 40 sec./140 W + 18 min./20 W

Mains supply grid should be limited to the highest prospective short circuit current of 1500 A.

Demands to mains supply safety for the application in accordance with IEC 60601-1 ed. 3.2, § 8.11.5

Approvals:

- IEC60601-1 edition 3.1
- ANSI/AAMI ES60601-1:2005/(R) 2012
- CSA CAN/CSA-C22.2 NO. 60601-1:14

LED indicator



CO65 is equipped with a green LED for indication of mains power connected.

When the CO65 is connected to mains, the LED is green. Connected only to battery, the LED is off.

Connected to MAINS	
LED colour	**Indication of operation**
Green	**On mains, <u>not</u> activated by hand or foot control.** The system is working ok and is ready for normal operation.
Yellow	**On mains, <u>not</u> activated by hand or foot control.** The system is defective and should not be operated.
Yellow	**On mains, activated by hand or foot control.** The system is working.

Not connected to mains but with BATTERY back-up	
LED colour	**Indication of operation**
Orange	**On battery, activated by hand or foot control.** The system is working.
No LED	**On battery, <u>not</u> activated by hand or foot control** or CO65 not connected to mains.

Acoustic signal functionality

The buzzer will make a warning, when a button on the hand control is pressed, and the battery state of charge is low.

The buzzer can also be activated by the control box to signal other conditions. This must be specified in the control box software.

Mounting

For mounting on a LINAK actuator (LA27, LA31 or LA40), a mounting bracket is required.

Dimensions – mounted with LA40

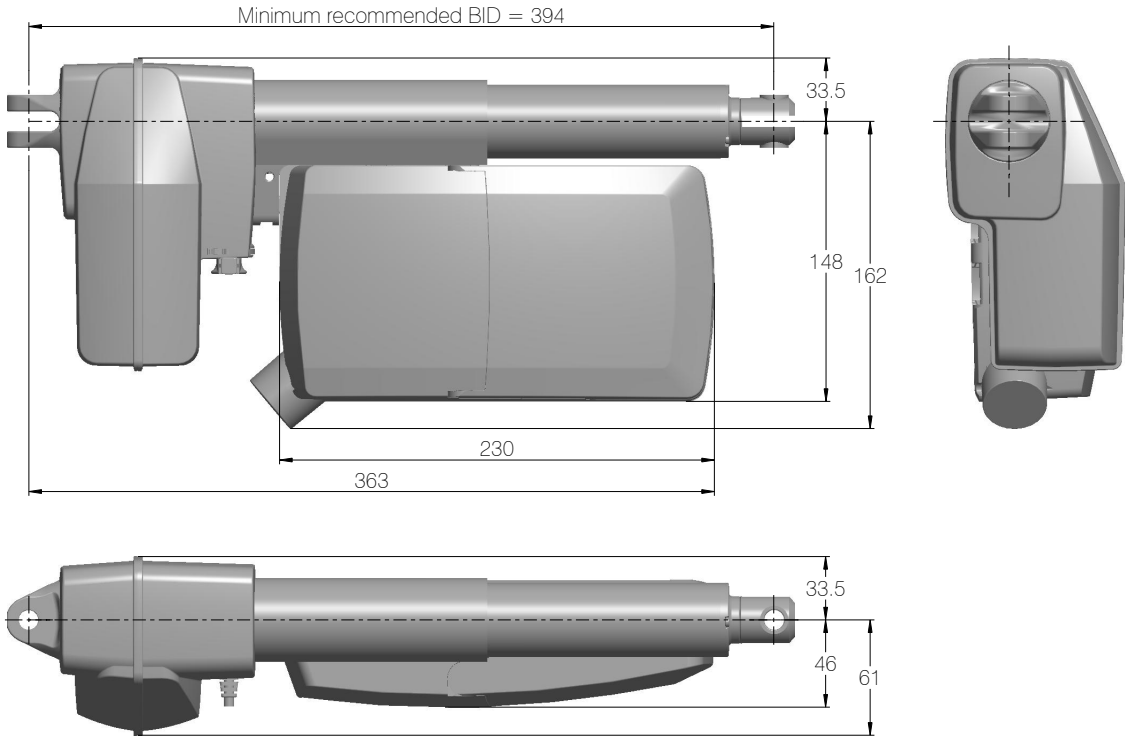

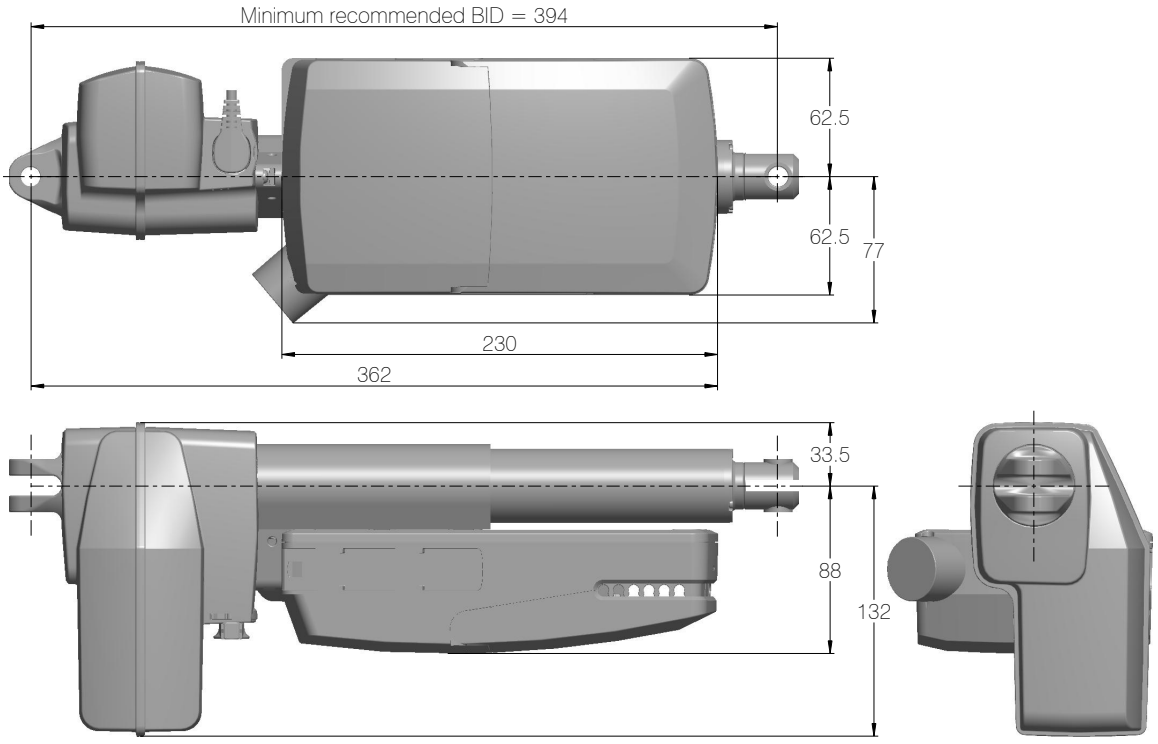

Drawing No.: 1015W4018

Dimensions – mounted with LA31

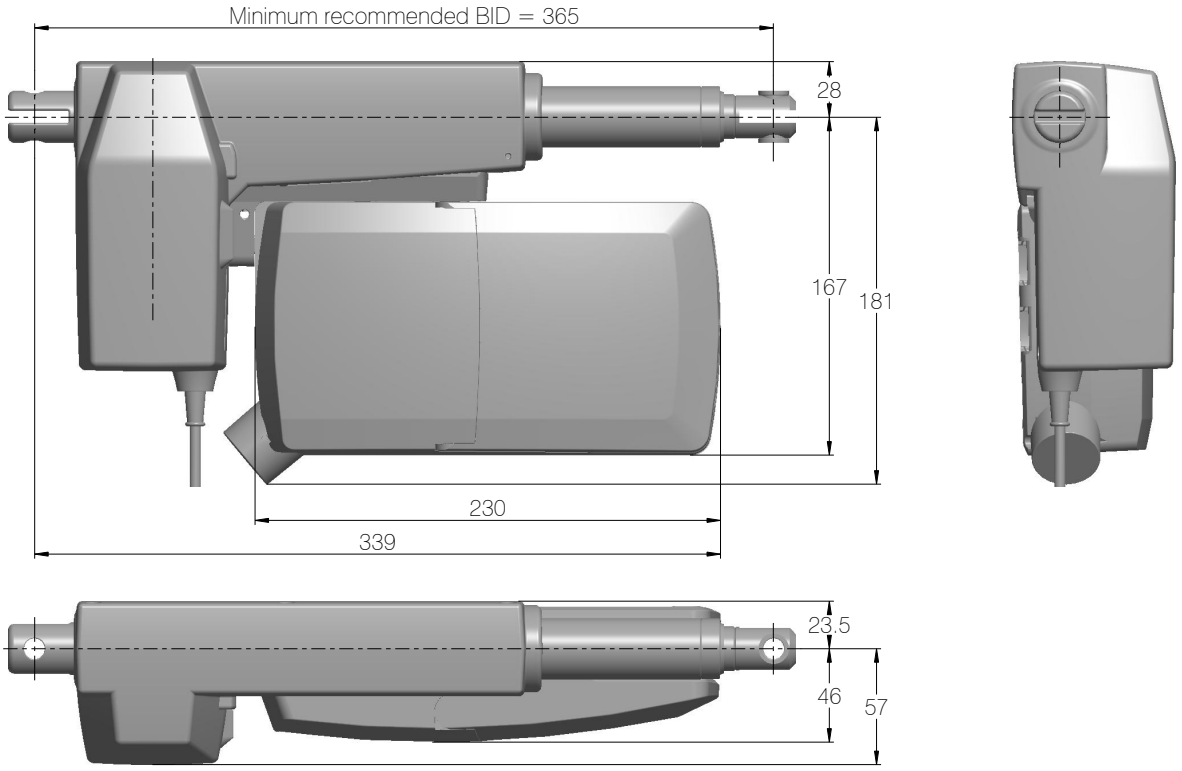

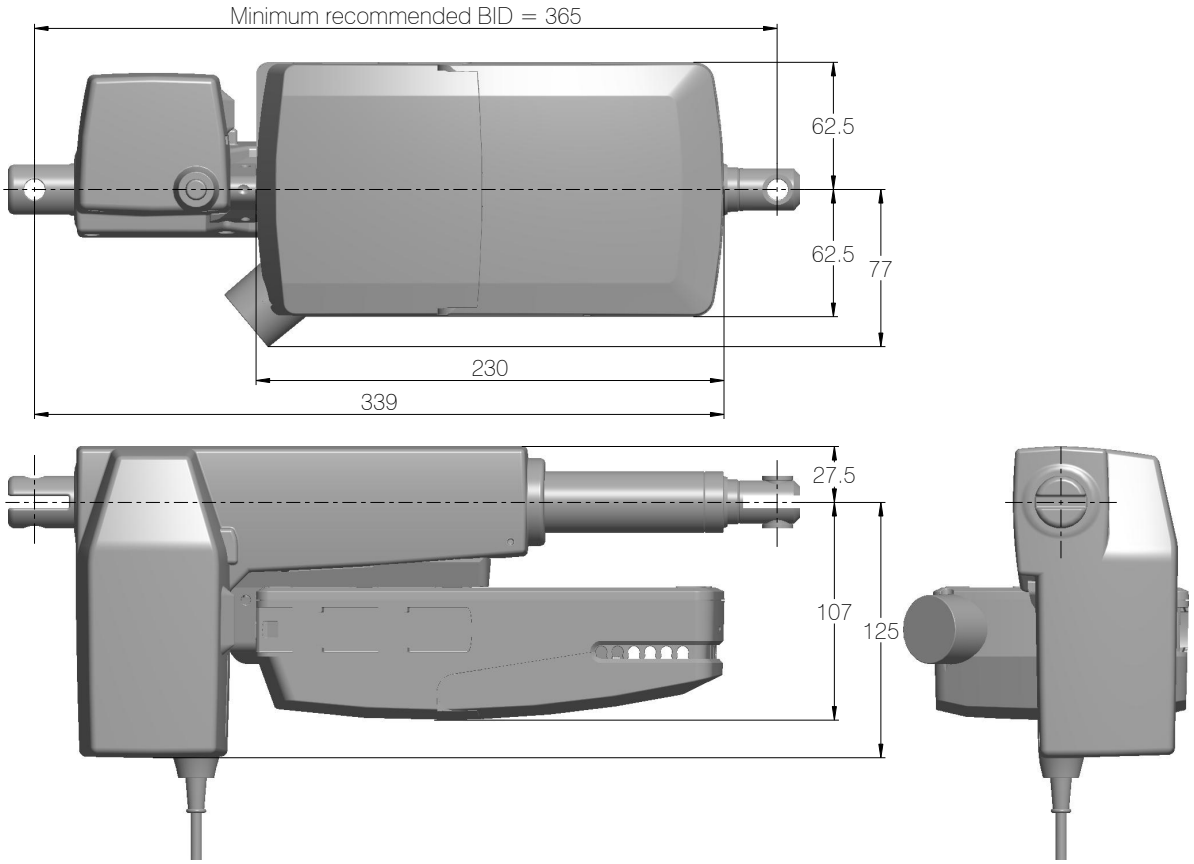

Drawing No.: 1015W4017

Dimensions – mounted with LA27

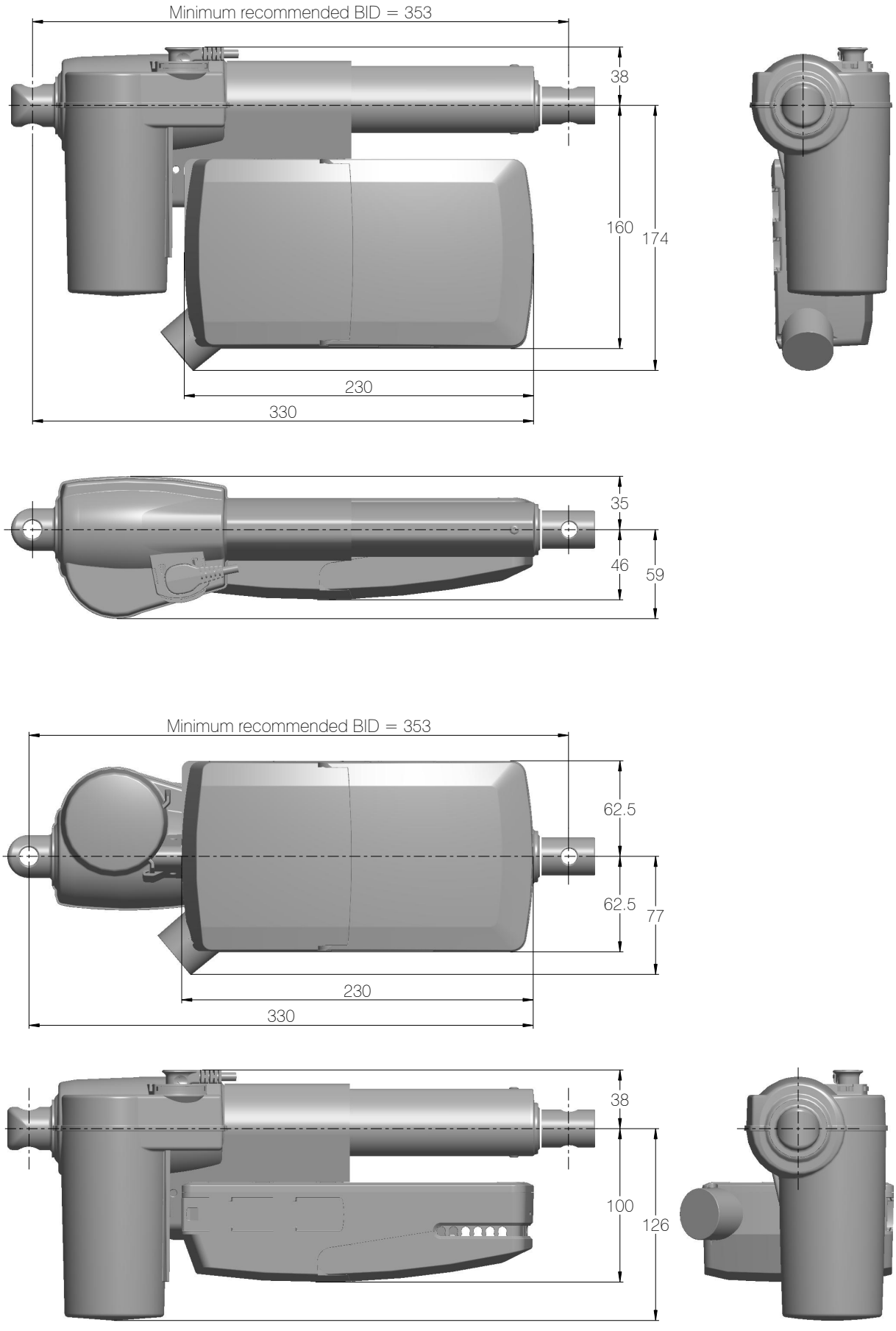

Drawing No.: 1015W4016

Mounting brackets

For mounting with LA40

Article No.: 1015W1002

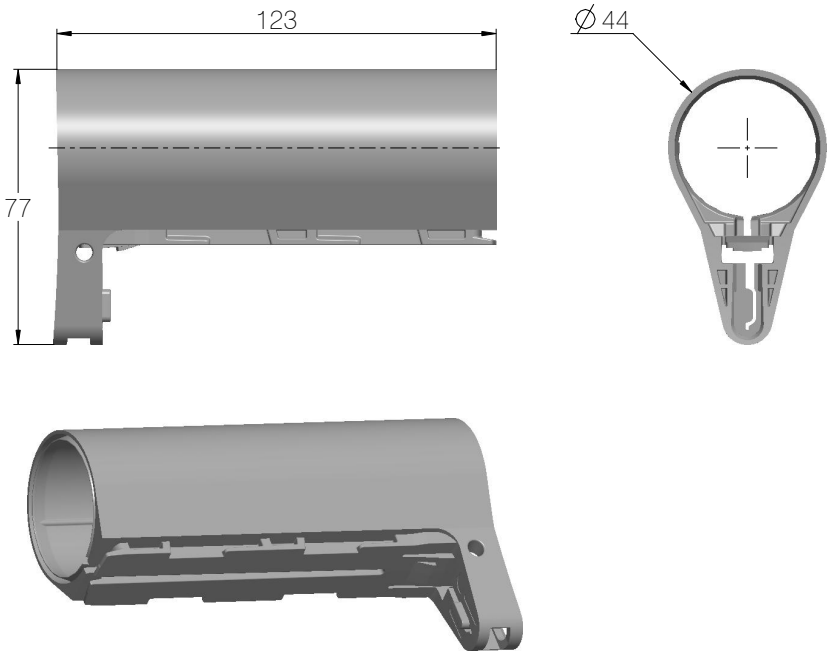

Drawing No.: 1015W4002

For mounting with LA31

Article No.: 1015W1004

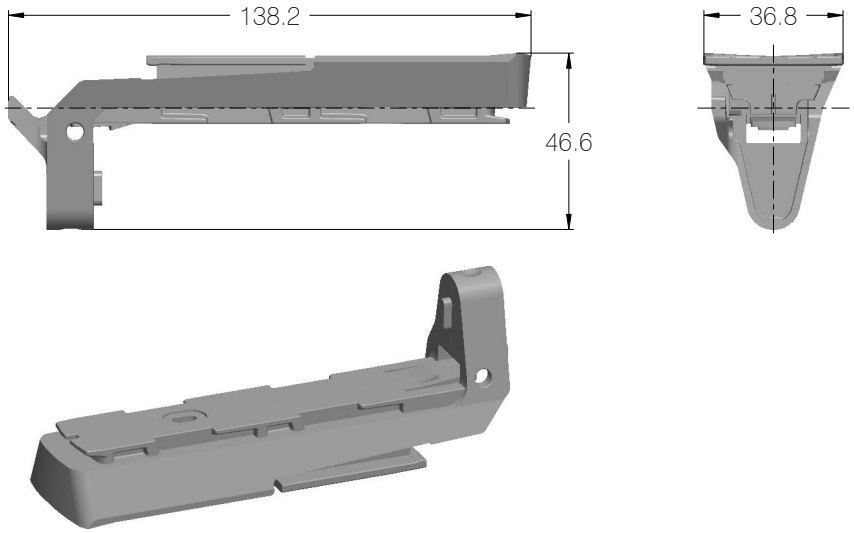

Drawing No.: 1015W4004

For mounting with LA27

Article No.: 1015W9003

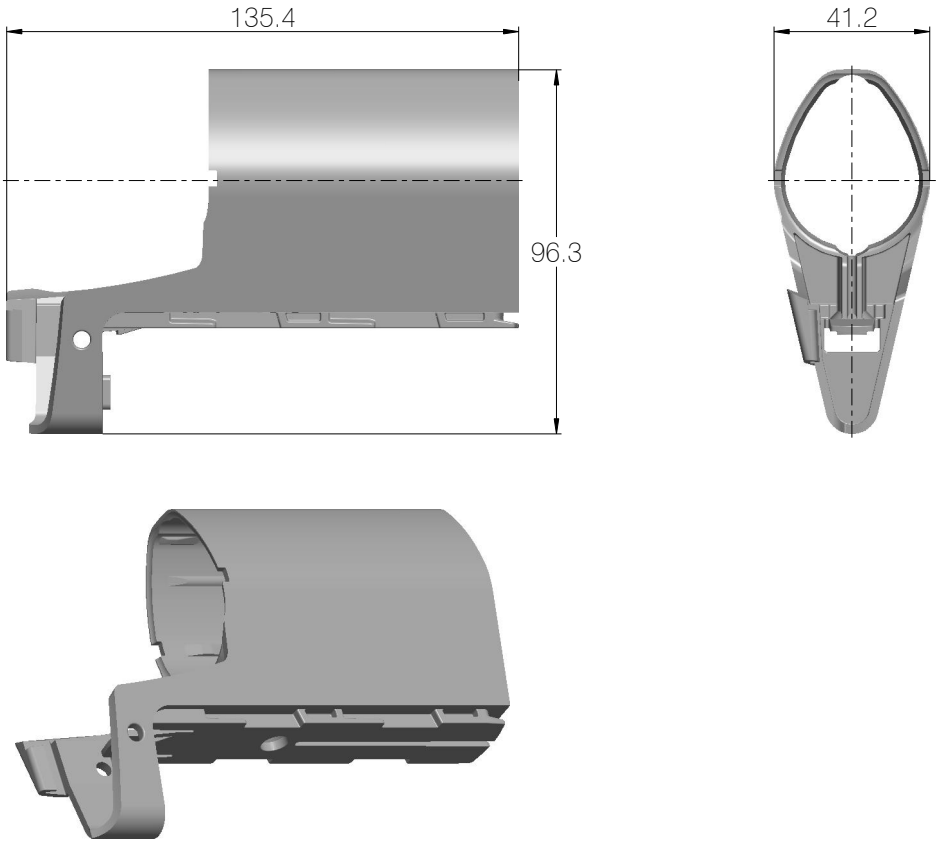

Drawing No: 1015W4003

The adapter 1015W9003 includes a screw that is halfway mounted, thus everything as one part.

Screw head torx size: T15
Screw torque: 1.2 ± 0.2 Nm

Mounting bracket (frame flat)

Article No. 1015W1001

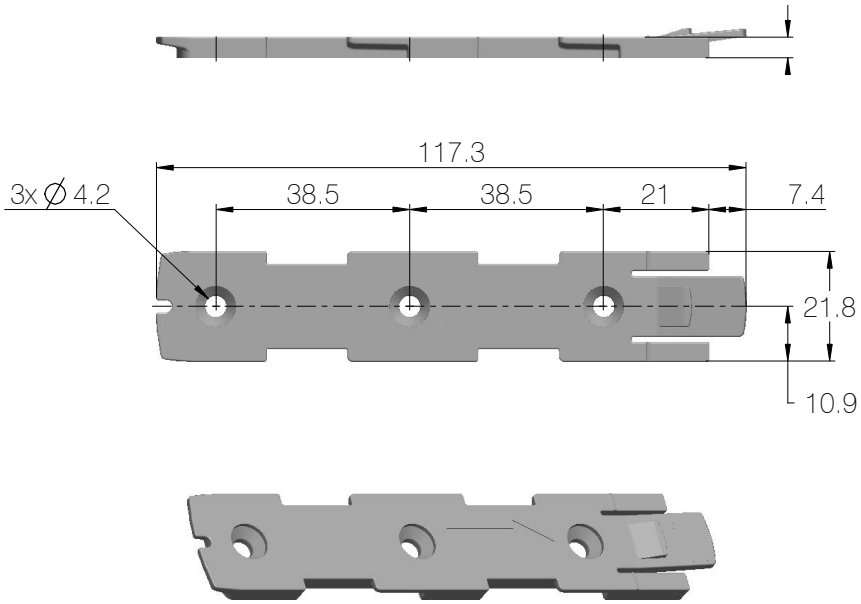

Drawing No.: 1015W4001

Mounting bracket (frame flat) w/M4 nuts

Article No. 1015W9009

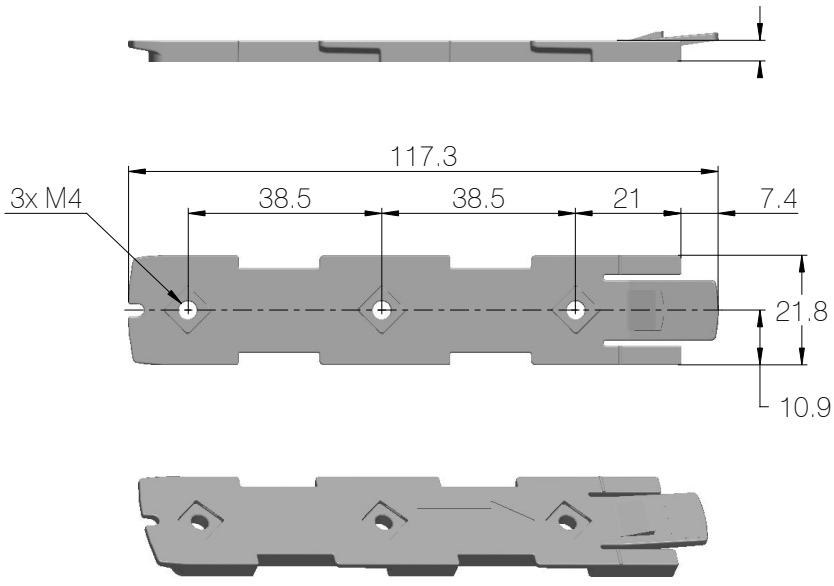

Drawing No.: 1015W4009

Mounted on frame

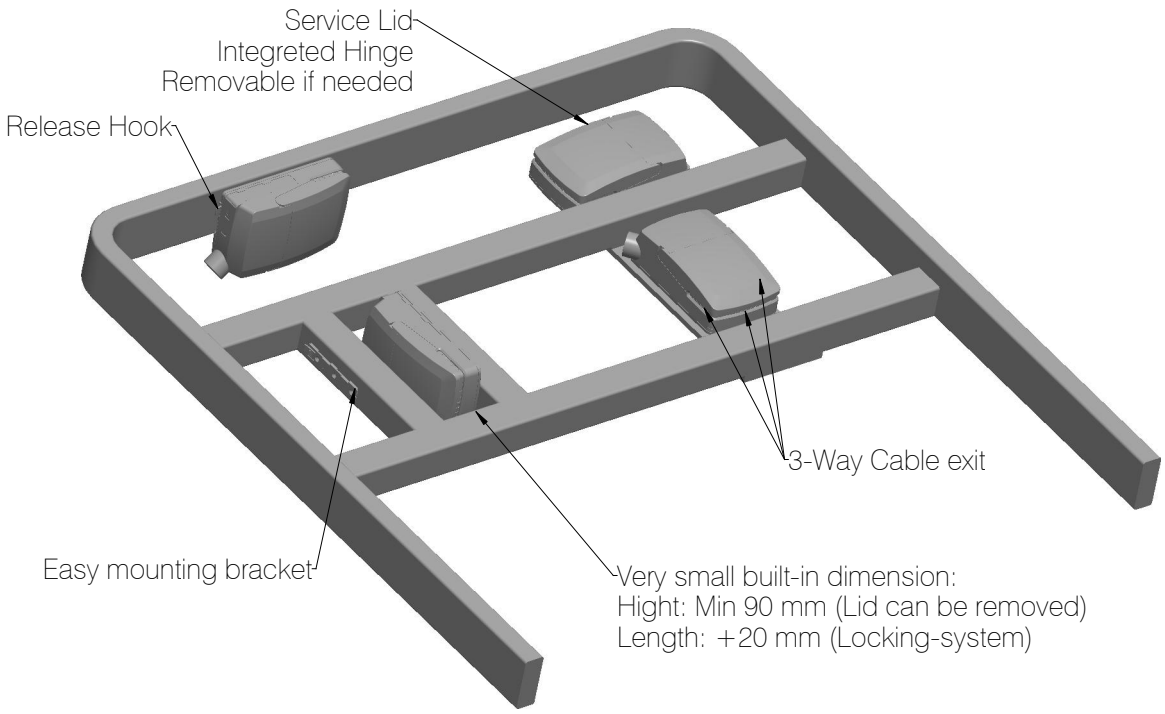

Drawing No.: 1013W4008

Mounting instructions

When mounting the control box onto the actuator (1)

Simply slide on the bracket until you hear a clear click (2)

Slide on the control box until you hear a click and the box is mounted (3)

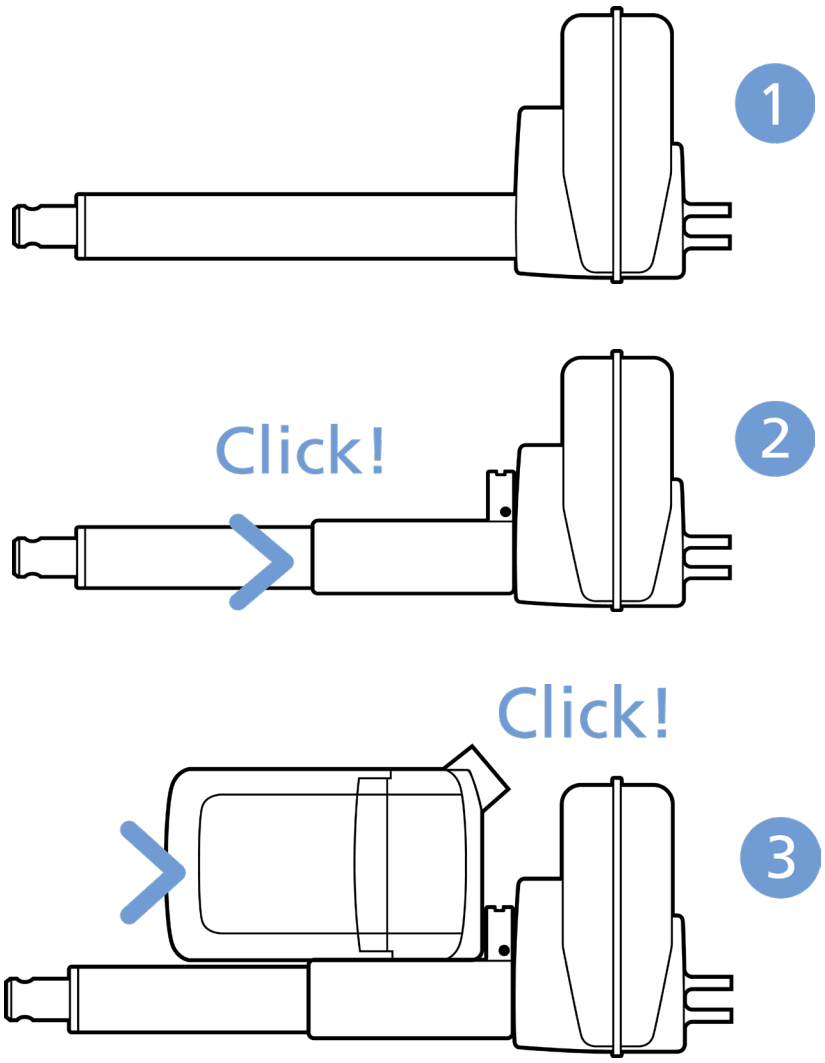

It is recommended to mount the CO65 in a position that allows water to escape.

Recommended torque: 0.6 Nm +/-0.1

The bracket can be mounted to the bed frame or any other application by following one of the following mounting procedures:

1. M6 nut to be placed in bracket and fixed with M6 bolt from the rear side
2. M5 machine screw with flat washer to be fixed through bracket with nut on the rear side
3. Self-tapping screw to be placed through bracket and onto the frame

Mounting of cables and cable lock

CO65 has a uniquely designed cable lid. The lid also works as an integrated cable lock when closed.

1. Mount cable plugs in control box
2. Close lid until lock snaps into place (see arrows)

To allow free access to the cables, the lid has a rest position when completely opened.

It is possible to remove the lid by lifting it a few degrees and pulling it away from the housing under tight mounting conditions.

Cable management



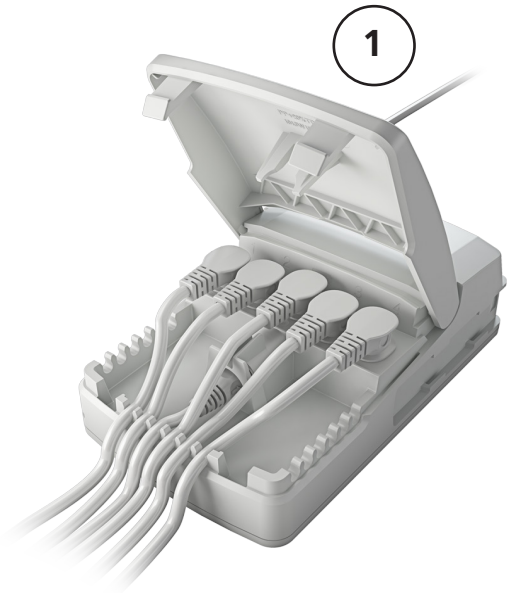

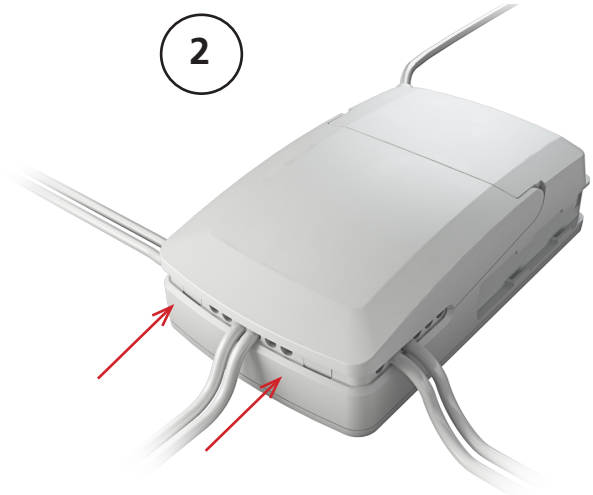

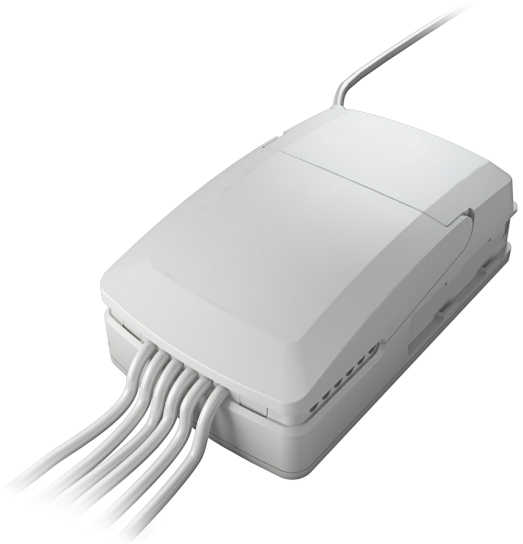

Recommendations

- To avoid unintended activation of actuators if hand control cables short-circuit, LINAK recommends to use an OpenBus system (CO65).
- If there is a risk that the system is overloaded and therefore shuts down thermally, LINAK recommends to use quick release actuators. These will allow functions to be lowered manually in case of a CO65 malfunction due to misuse/abuse.
- If the customer has other essential performance than 'no unintended movement', he must consider this in his own risk analysis. LINAK disclaims any liability.
- If the actuator or the control cable is removed from the control box, the cable lock must be applied. To ensure movement in this case, LINAK recommends to use quick release actuators in the application.
- To avoid cables from being damaged by pulling, LINAK recommends to make safe cabling. If movement is an essential performance, LINAK recommends to apply quick release actuators, for example, to ensure movement.
- To avoid thermal protection from being activated, do not exceed load specifications. If movement is an essential performance, LINAK recommends to apply quick release actuators, for example, to ensure movement.
- Sales must request a review of the products according to current cut-off limits.
- Push plugs fully into correct sockets. Make sure that the plugs are completely inserted.
- Mount control box lid and close lid until locked in place.

Motor cable

Always use 6-wire cables.

Please note that angled motor cable plugs are required for connection to the control box.

Warnings

- Use EPR or ensure that the user takes care not to squeeze the mains cable.
- Always check correct assembly after mounting and service to ensure that the cable lock is mounted. (Connectors are usually removed during cleaning)
- Always use approved chemicals with the housing as the plastic may show corrosion caused by some chemicals. As a result water may accumulate/gather in housing.
- Take special precautions concerning 3rd party interfacing. Please contact LINAK for further information.
- Make a review of all product specifications before system set-up if the current cut-off limit is higher than the maximum allowed current cut-off for the actuator.
- To avoid cable interruption and actuator defects make a proper cable installation and inspect regularly for wear and damage. Defective parts must be replaced.
- After service inspection, the application must be tested for correct functionality before it is put into operation to avoid actuator plugs being mixed during service. Operators must not be inside entrapment area.
- To avoid electrical failure or system disturbance inspect regularly for wear and damage. Defective parts must be replaced.
- Make a proper cable installation to avoid short-circuit cables for handset/controls. Regular inspection must be made for wear and damage. Defective parts must be replaced.
- Do not mount the actuator with the spindle facing downwards to avoid that the actuator slips off the bracket with mounted control box. The bracket can come loose when exposed to shock or hard vibrations, for instance when passing doorsteps. Regular inspection must be made to ensure proper fixation of control box and bracket on actuator.

CO71



The LINAK control box CO71 offers a consolidated range of unprecedented features – all utilising standardised technology, interfaces and compatibility.

The CO71 for LINAK actuators is intended for the control of, for example, hospital bed movement.

Usage

Operation temperature:	+5 °C to +40 °C
Storage temperature:	-10 °C to +50 °C
Relative humidity:	20% - 80% - non-condensing
Atmospheric pressure:	700 to 1060 hPa
Meters above sea level:	Max. 3000 meters
Duty cycle	10% - 2/18 min. on/off continuous use Maximum power is 350 W for 80 seconds and 175 W for 40 seconds at 25 °C.

Mains supply grid should be limited to the highest prospective short circuit current of 1500 A.

Demands to mains supply safety for the application in accordance with IEC 60601-1 ed. 3.2, § 8.11.5

Approvals:

- IEC60601-1 edition 3.1
- ANSI/AAMI ES60601-1:2005/(R) 2012
- CSA CAN/CSA-C22.2 NO. 60601-1:14
- PSE Japan

LED indicator

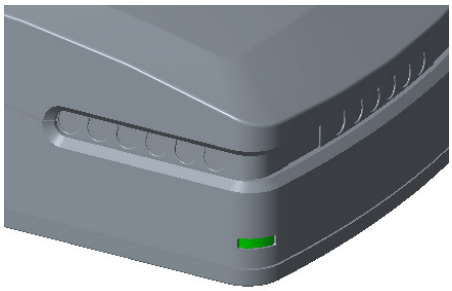

CO71 is equipped with a green LED for indication of mains power connected.

When the CO71 is connected to mains, the LED is green. Connected only to battery, the LED is off.

Connected to MAINS	
LED colour	**Indication of operation**
Green	**On mains, not activated by hand or foot control.** The system is working ok and is ready for normal operation
Yellow	**On mains, not activated by hand or foot control.** The system is defective and should not be operated.
Yellow	**On mains, activated by hand or foot control.** The system is working.

Not connected to mains but with BATTERY back-up	
LED colour	**Indication of operation**
Orange	**On battery, activated by hand or foot control.** The system is working
No LED	**On battery, not activated by hand or foot control.** or CO71 not connected to mains

Acoustic signal functionality

The buzzer will make a warning, when a button on the hand control is pressed, and the battery state of charge is low.

The buzzer can also be activated by the control box to signal other conditions. This must be specified in the control box software.

Mounting

Dimensions – mounted with LA40

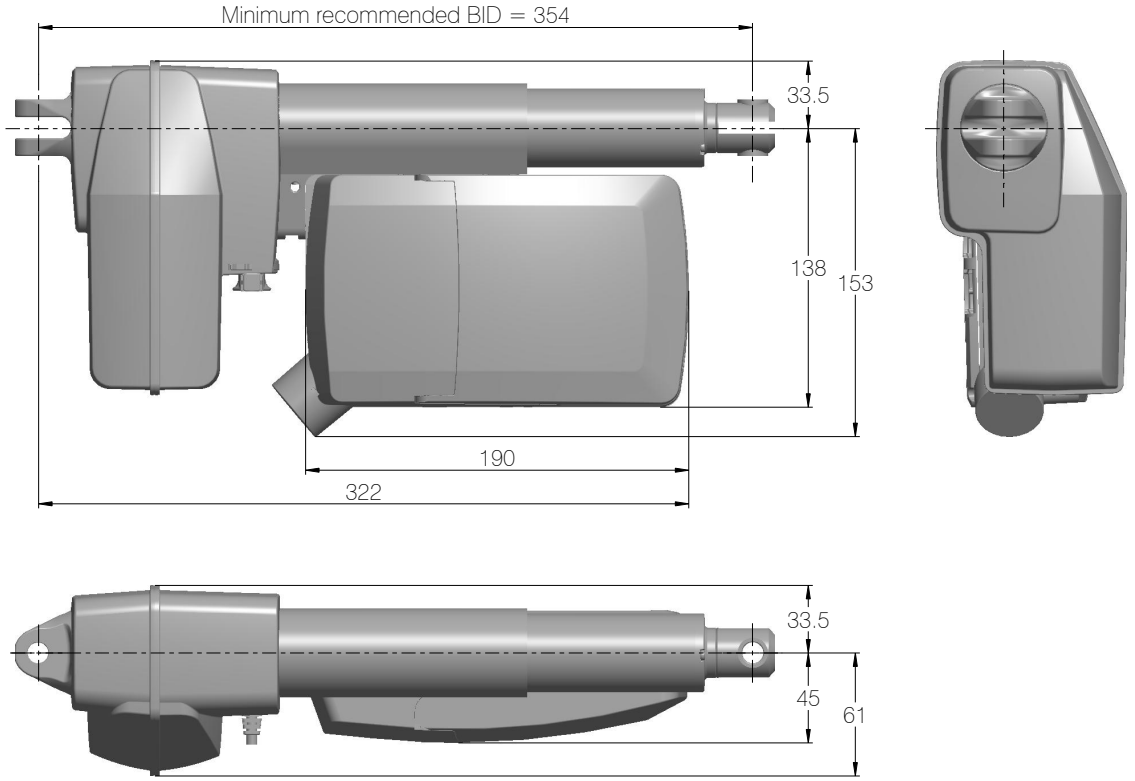

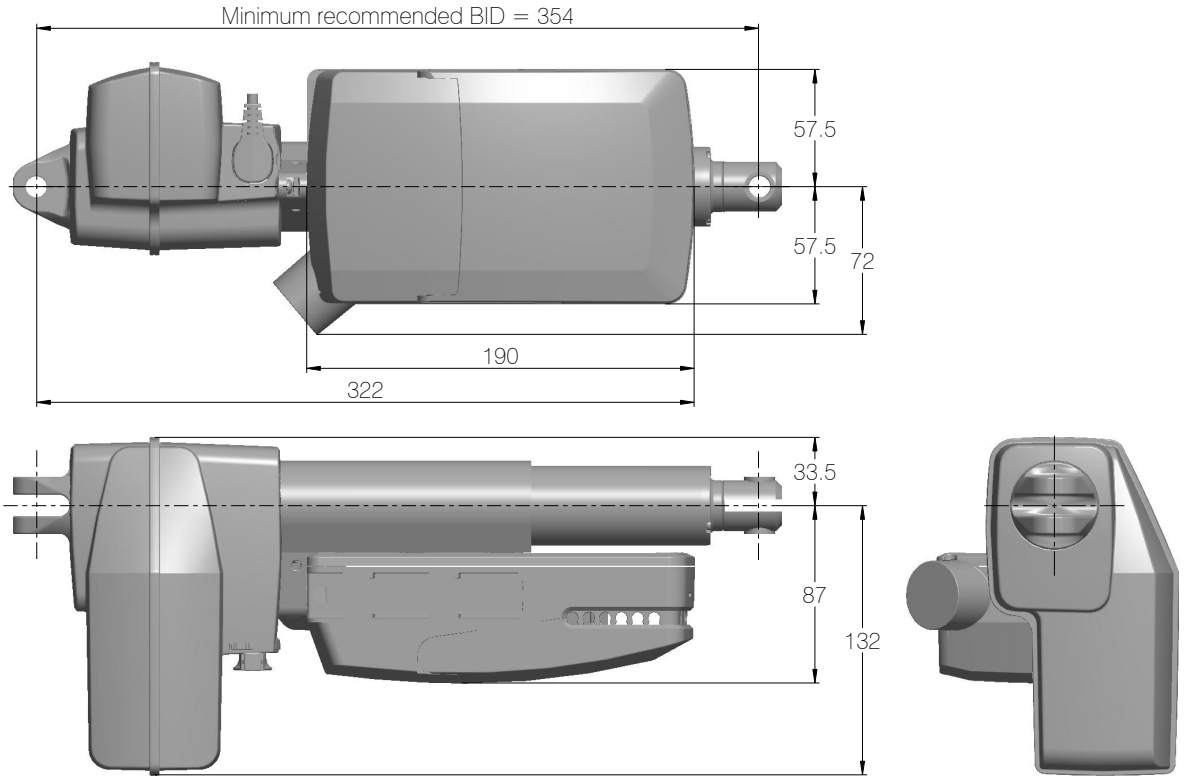

Drawing No.: 1015W4018

Dimensions – mounted with LA31

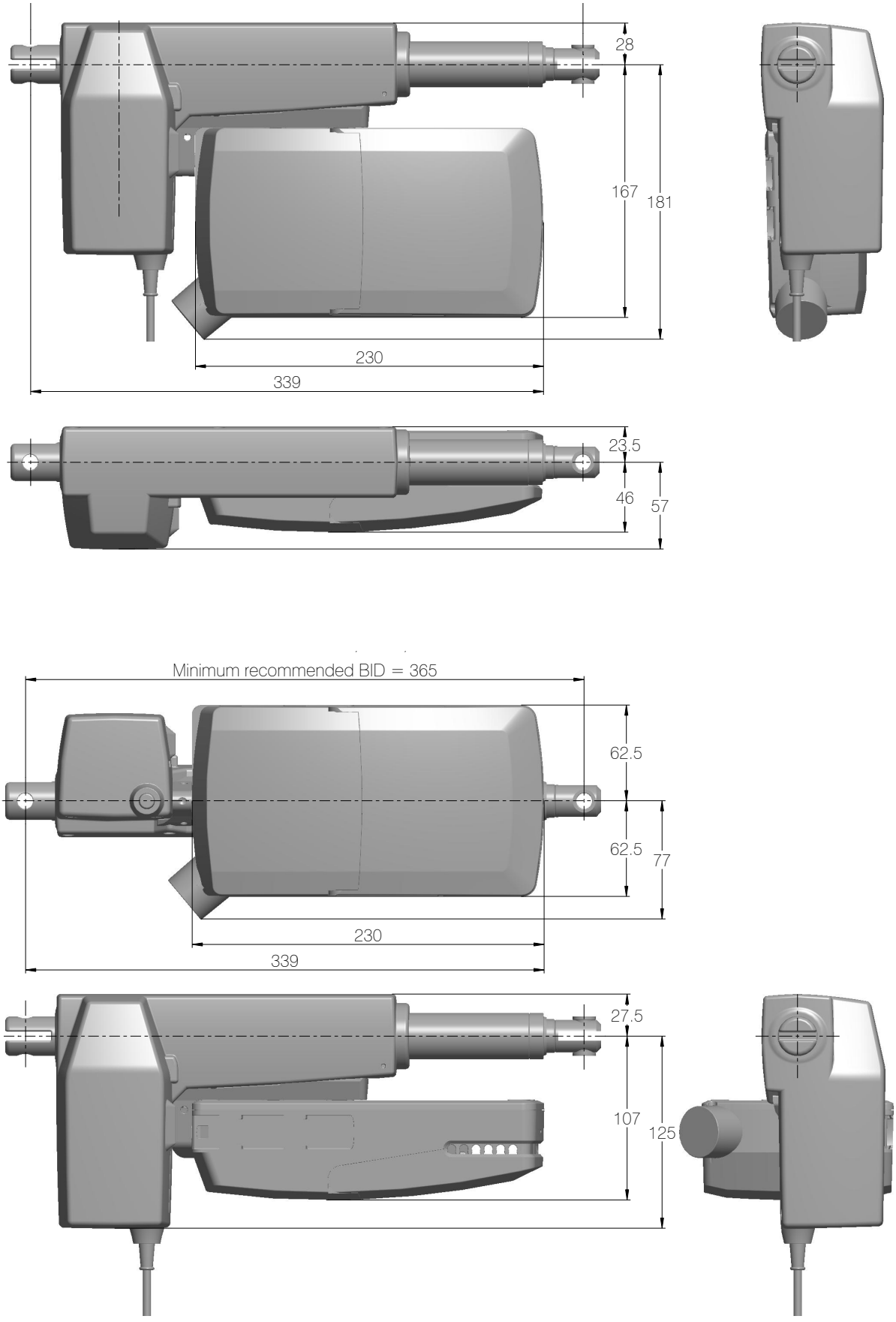

Drawing No.: 1015W4017

Dimensions – mounted with LA27

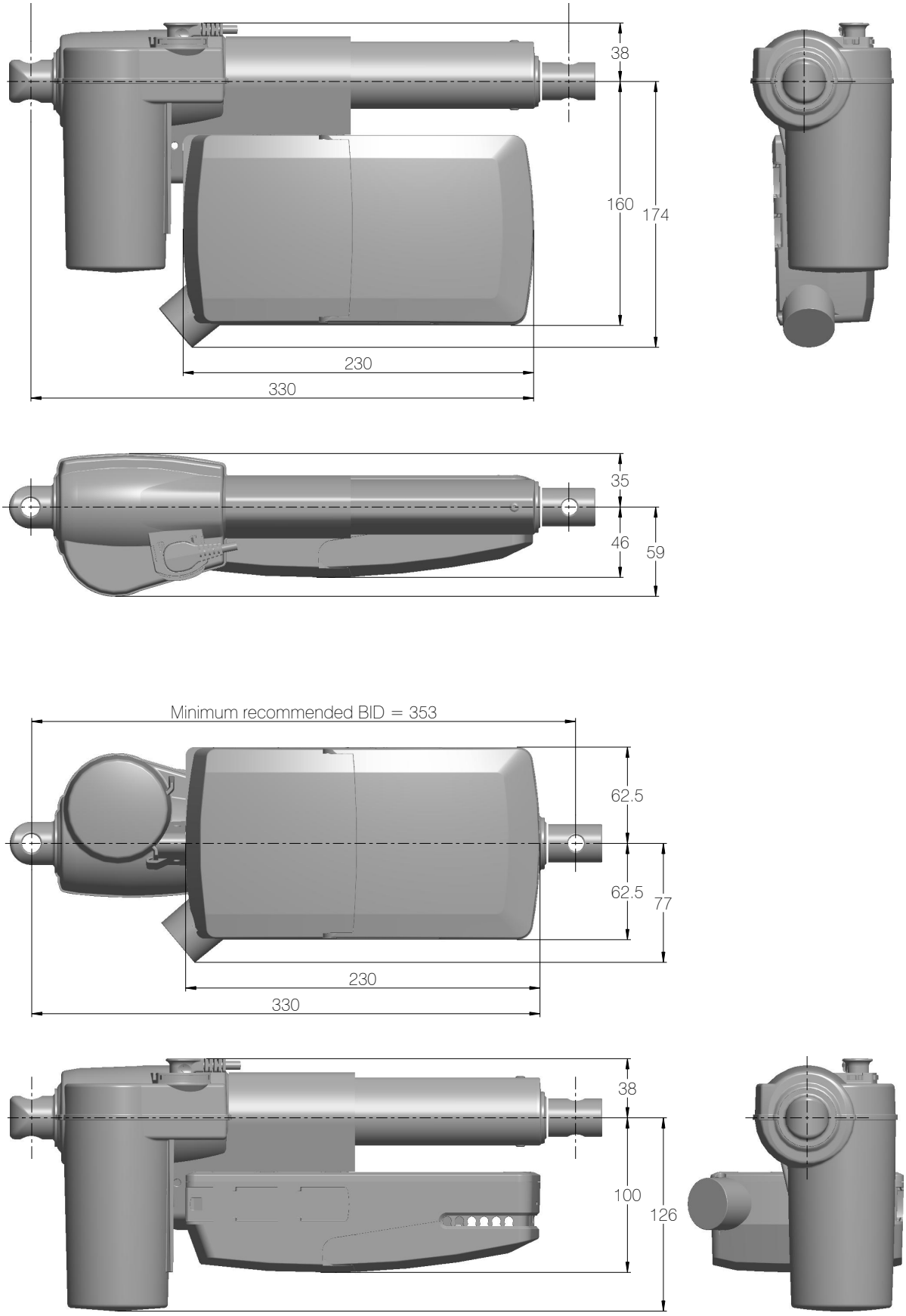

Drawing No.: 1015W4016

Mounting brackets

For mounting with LA40

Article No.: 1015W1002

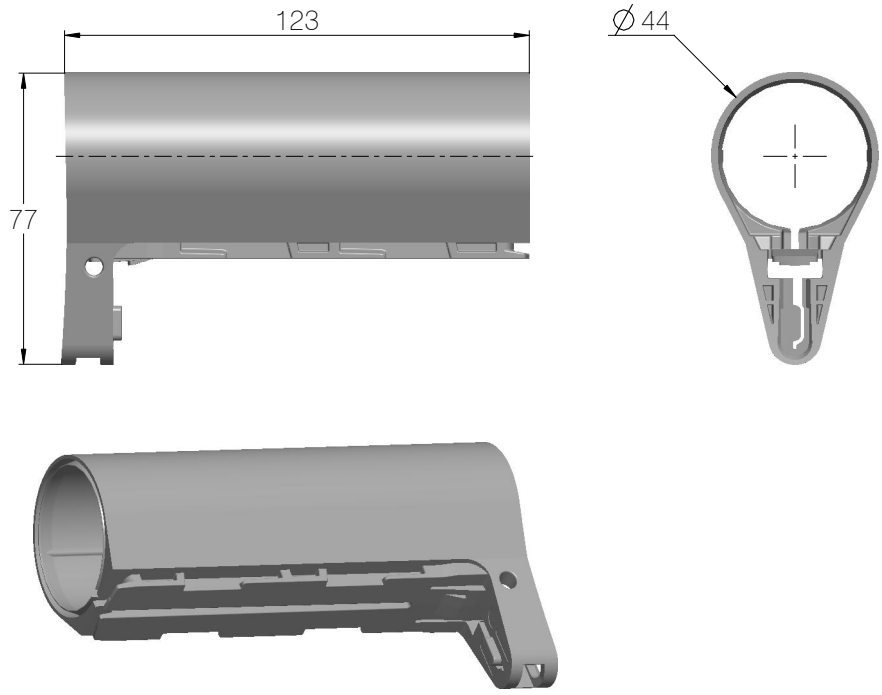

Drawing No.: 1015W4002

For mounting with LA31

Article No.: 1015W1004

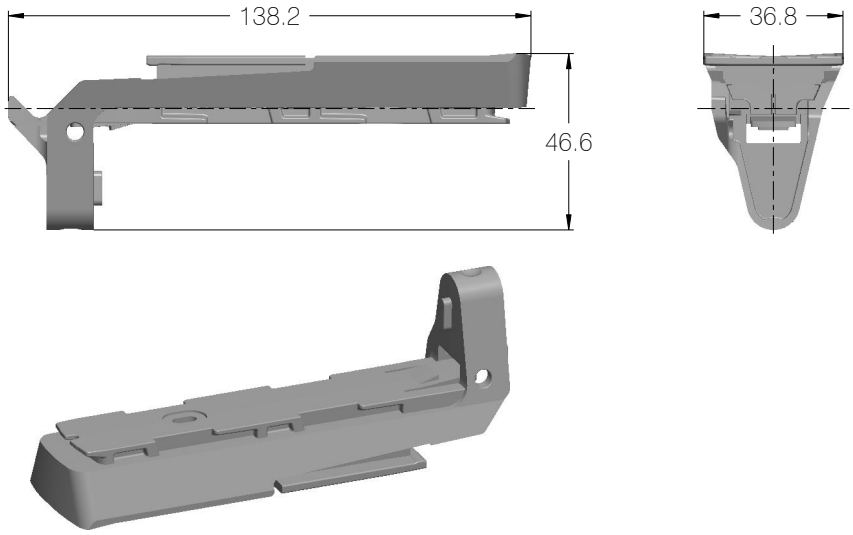

Drawing No.: 1015W4004

For mounting with LA27

Article No.: 1015W9003

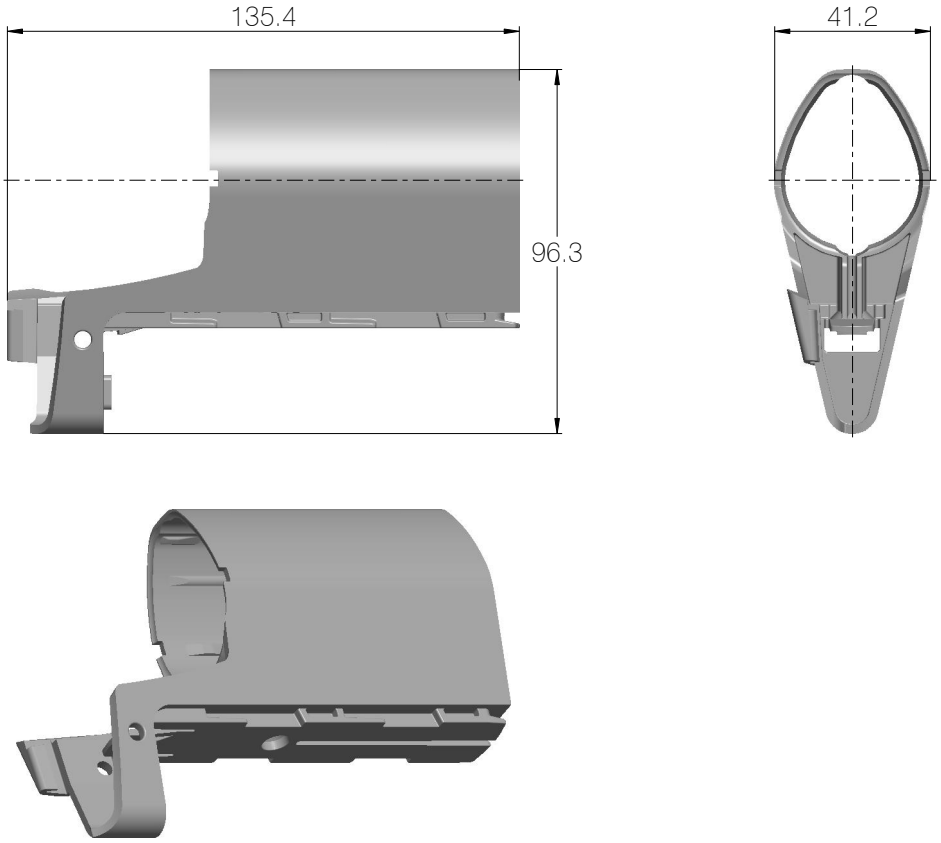

Drawing No: 1015W4003

The adapter 1015W9003 includes a screw that is halfway mounted, thus everything as one part.

Screw head torx size: T15
Screw torque: 1.2 ± 0.2 Nm

Mounting bracket (frame flat)

Article No. 1015W1001

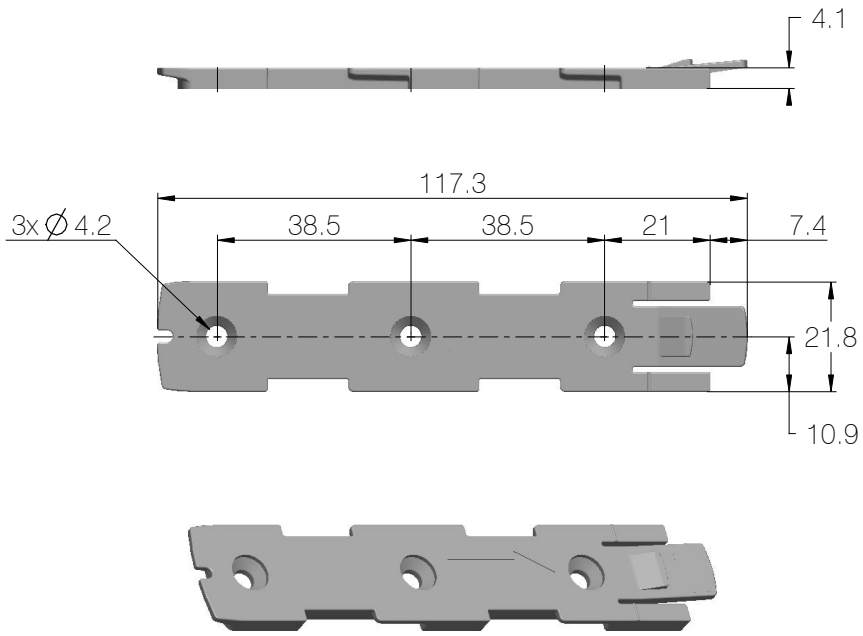

Drawing No.: 1015W4001

Mounting bracket (frame flat) w/M4 nuts

Article No. 1015W9009

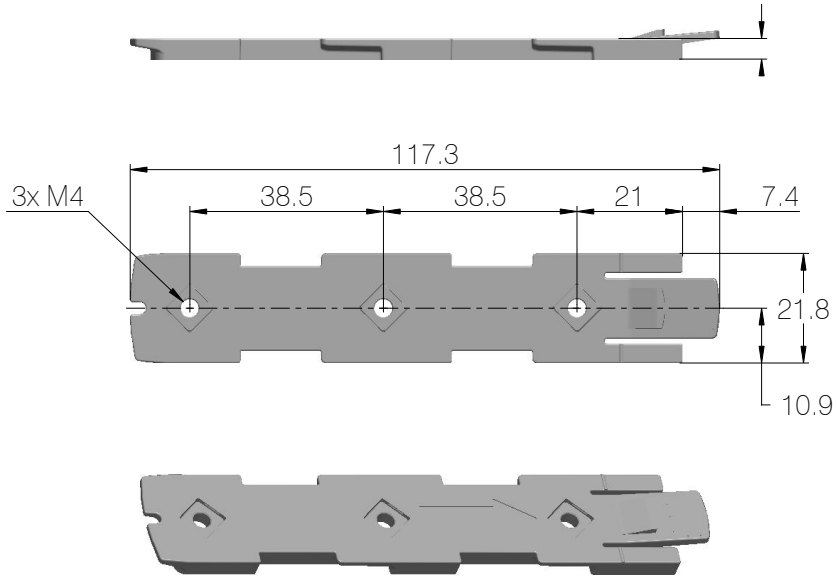

Drawing No.: 1015W4009

Mounted on frame

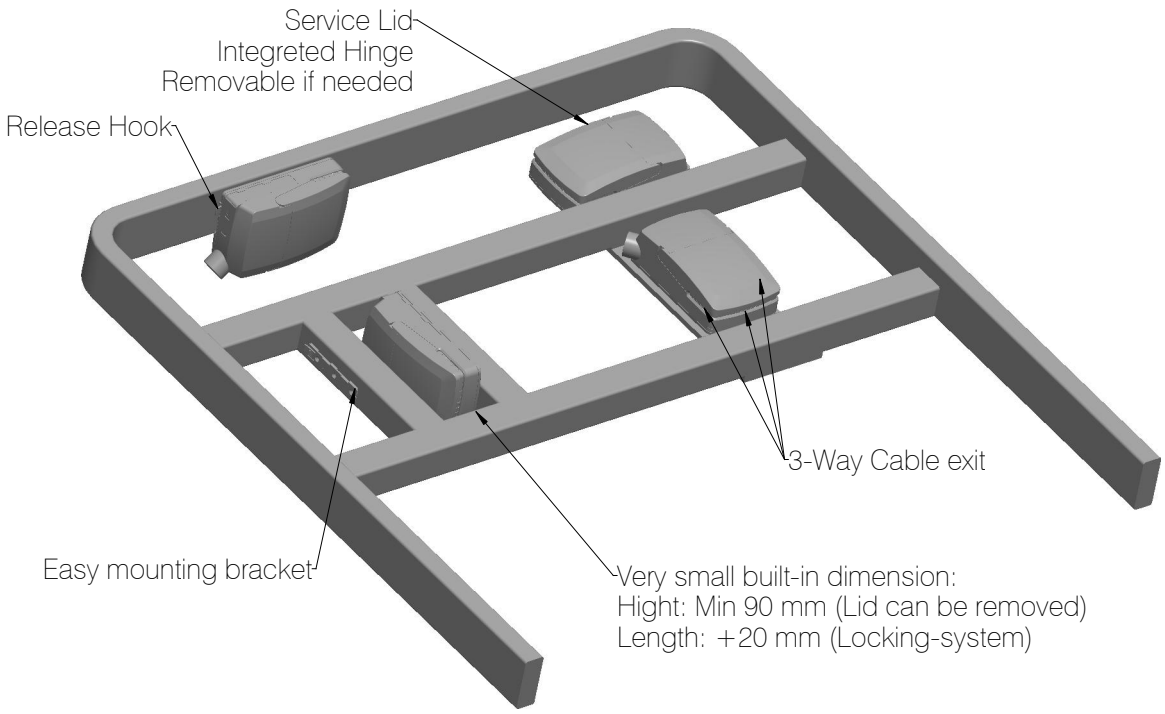

Drawing No.: 1013W4008

Mounting instructions

When mounting the control box onto the actuator (1)

Simply slide on the bracket until you hear a clear click (2)

Slide on the control box until you hear a click and the box is mounted (3)

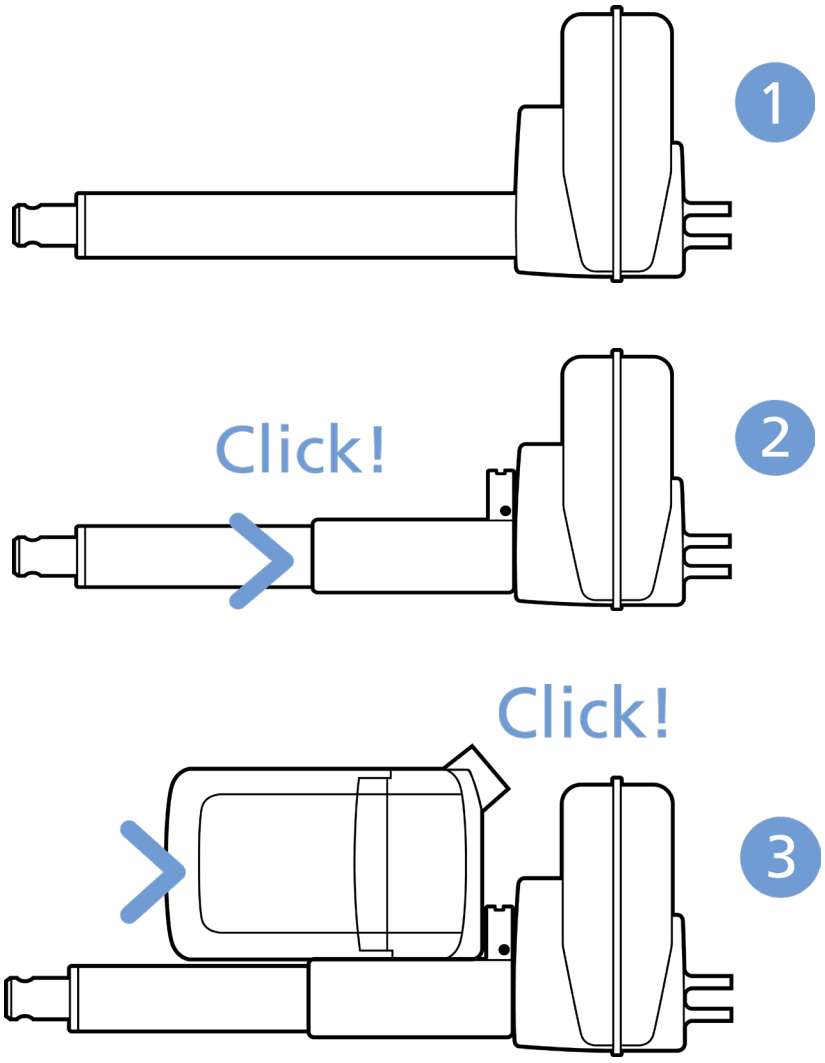

It is recommended to mount the CO71 in a position that allows water to escape.

Recommended torque: 0.6Nm +/-0.1

The bracket can be mounted to the bed frame or any other application by following one of the following mounting procedures:

1. M6 nut to be placed in bracket and fixed with M6 bolt from the rear side
2. M5 machine screw with flat washer to be fixed through bracket with nut on the rear side
3. Self-tapping screw to be placed through bracket and onto the frame

Mounting of cables and cable lock

CO71 has a uniquely designed cable lid. The lid also works as an integrated cable lock when closed.

1. Mount cable plugs in control box
2. Close lid until lock snaps into place (see arrows)

To allow free access to the cables, the lid has a rest position when completely opened.

It is possible to remove the lid by lifting it a few degrees and pulling it away from the housing under tight mounting conditions.

Cable management



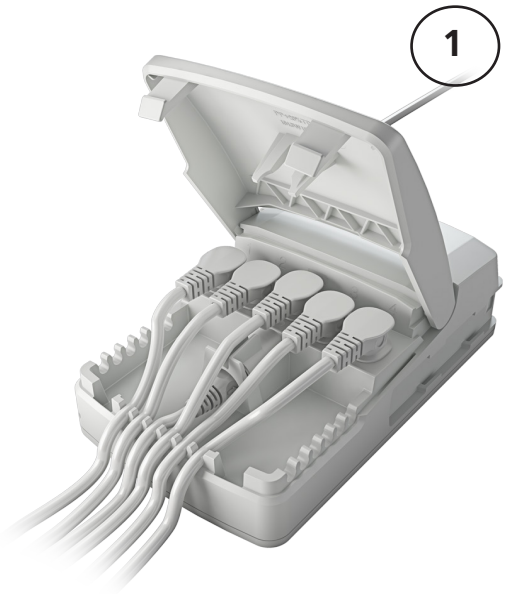

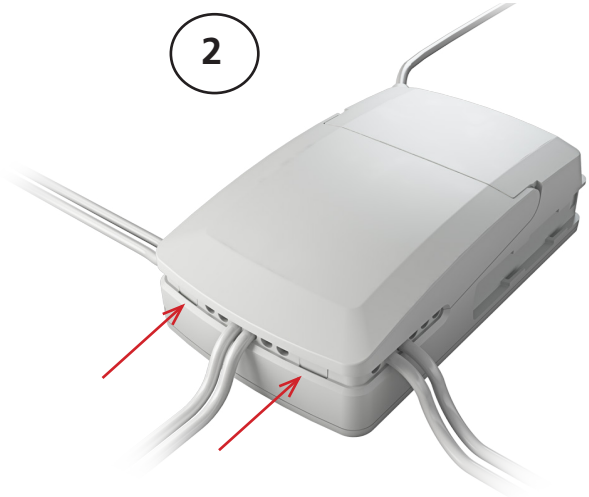

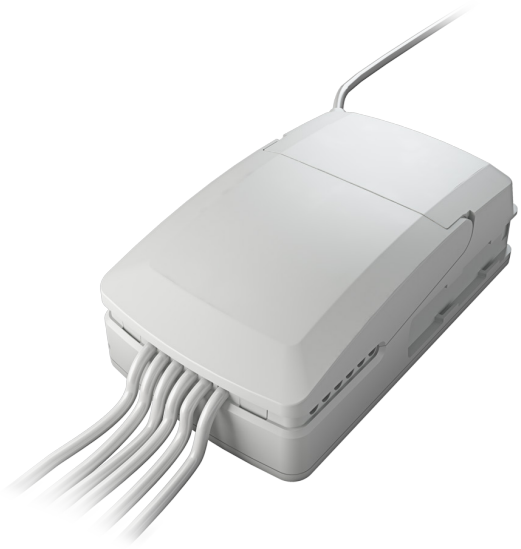

Recommendations

- To avoid unintended activation of actuators if hand control cables short-circuit, LINAK recommends to use an OpenBus system (CO71).
- If there is a risk that the system is overloaded and therefore shuts down thermally, LINAK recommends to use quick release actuators. These will allow functions to be lowered manually in case of a CO71 malfunction due to misuse/abuse.
- If the customer has other essential performance than 'no unintended movement', he must consider this in his own risk analysis. LINAK disclaims any liability.
- If the actuator or the control cable is removed from the control box, the cable lock must be applied. To ensure movement in this case, LINAK recommends to use quick release actuators in the application.
- To avoid cables from being damaged by pulling, LINAK recommends to make safe cabling. If movement is an essential performance, LINAK recommends to apply quick release actuators, for example, to ensure movement.
- To avoid thermal protection from being activated, do not exceed load specifications. If movement is an essential performance, LINAK recommends to apply quick release actuators, for example, to ensure movement.
- Sales must request a review of the products according to current cut-off limits.
- Push plugs fully into correct sockets and make sure that the plugs are completely inserted.
- Mount control box lid and close lid until locked in place.

Motor cable

Always use 6-wire cables.

Please note that angled motor cable plugs are required for connection to the control box.

Warnings

- Use EPR or ensure that the user takes care not to squeeze the mains cable.
- Always check correct assembly after mounting and service to ensure that the cable lock is mounted. (Connectors are usually removed during cleaning)
- Always use approved chemicals with the housing as the plastic may show corrosion caused by some chemicals. As a result water may accumulate/gather in housing.
- Take special precautions concerning 3rd party interfacing. Please contact LINAK for further information.
- Make a review of all product specifications before system set-up if the current cut-off limit is higher than the maximum allowed current cut-off for the actuator.
- To avoid cable interruption and actuator defects make a proper cable installation and inspect regularly for wear and damage. Defective parts must be replaced.
- After service inspection, the application must be tested for correct functionality before it is put into operation to avoid actuator plugs being mixed during service. Operators must not be inside entrapment area.
- To avoid electrical failure or system disturbance inspect regularly for wear and damage. Defective parts must be replaced.
- Make a proper cable installation to avoid short-circuit cables for handset/controls. Regular inspection must be made for wear and damage. Defective parts must be replaced.
- Loss of mains: If the power supply is switched off for a short time (between 1 and approx. 1.5 seconds), the control box will only start up again if a key is pressed. This is only relevant for OpenBus™ systems that run continually.
- Do not mount the actuator with the spindle facing downwards to avoid that the actuator slips off the bracket with mounted control box. The bracket can come loose when exposed to shock or hard vibration, for instance when passing doorsteps. Regular inspection must be made to ensure proper fixation of control box and bracket on actuator.
- Wireless: A hand control can run a bed that is out of sight.

OPS – OpenBus Power Supply



The LINAK® OpenBus Power Supply (OPS) is intended to control up to three heat pads. The OPS is equipped with 120 W constant power and comes as IPX6 Washable DURA™.

The OPS offers flexible system combinations and can be used as a stand-alone system or as add-on to the existing LINAK CO control box solution as CO-Link™.

Usage

Duty cycle:	100%
Operation temperature:	+5 °C to + 40 °C
Storage temperature:	-10 °C to + 50 °C
Relative humidity:	20% to 80% - non-condensing
Atmospheric pressure:	700 to 1060 hPa
Height above sea level:	Max. 3000 meters
Flammability rating:	UL94 V2
Latex free:	Yes

Mains supply grid should be limited to the highest prospective short circuit current of 1500 A.

Demands to mains supply safety for the application in accordance with IEC 60601-1 ed. 3.2, § 8.11.5

Approvals:
IEC 60601-1
ANSI/AAMI ES60601
CSA CAN/CSA-C22.2 NO. 60601
IEC 60601-1-6
IEC 60601-1-2

Mounting

Mounting bracket (frame flat) - article No. 1015W1001

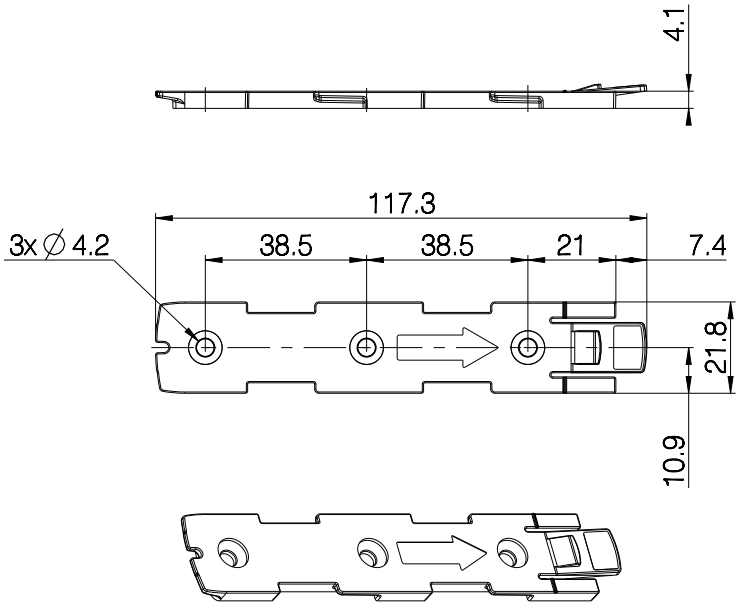

Drawing No.: 1015W4001

Mounting bracket (frame flat) w/M4 nuts - article No. 1015W9009

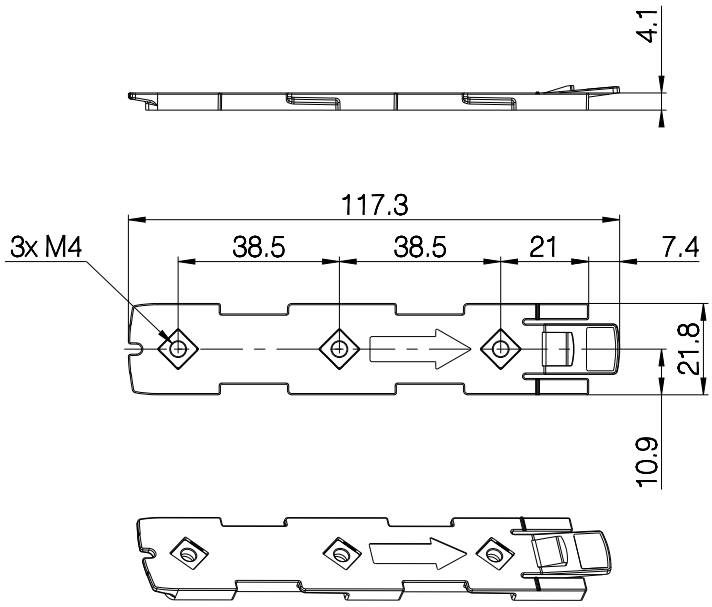

Drawing No.: 1015W4009

OPS - mounted on frame

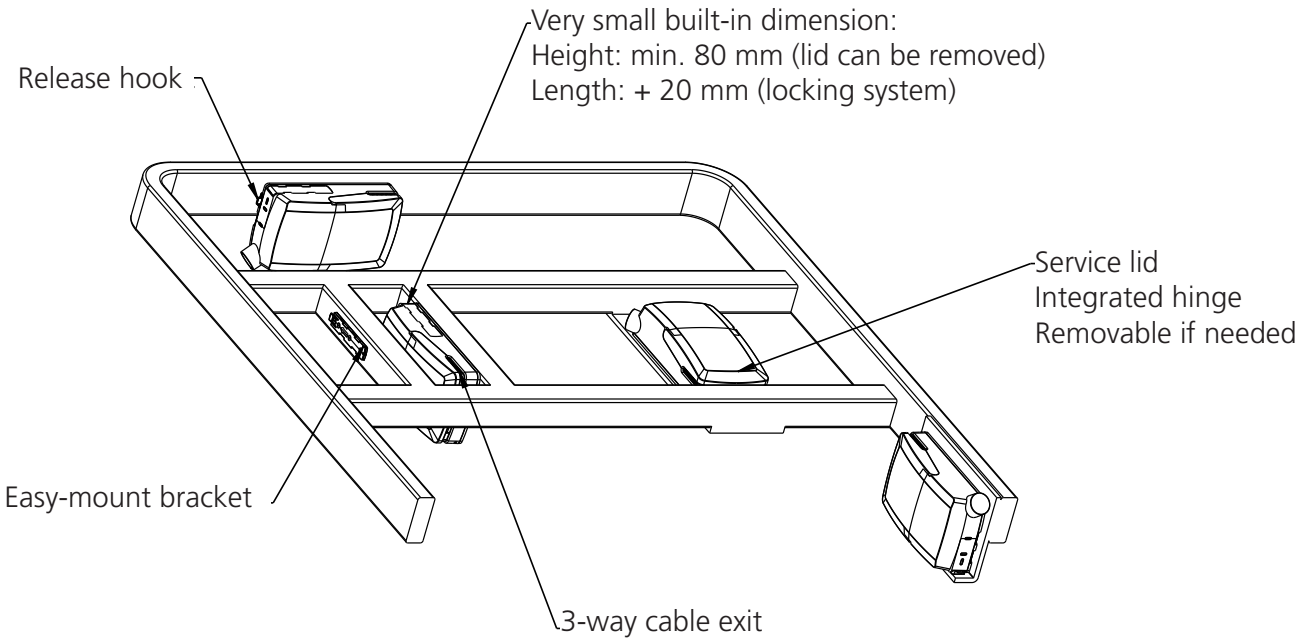

Mounting of cables and cable lock

The OPS has a uniquely designed cable lid. The lid also works as an integrated cable lock when closed.

1) Mount cable plugs in the OPS

2) Close lid until lock snaps into place (see arrows)

To allow free cable access, the lid has a rest position when completely opened.

It is possible to remove the lid by lifting it a few degrees and pulling it away from the housing under tight mounting conditions.

See illustrations:



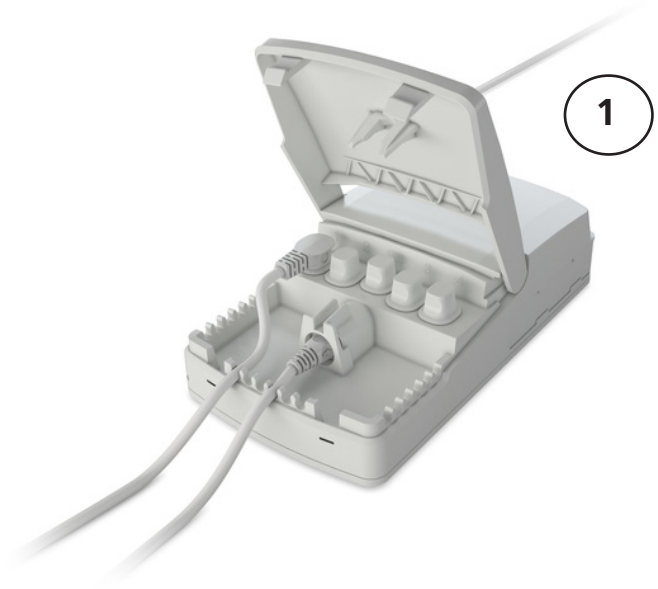

Cable management

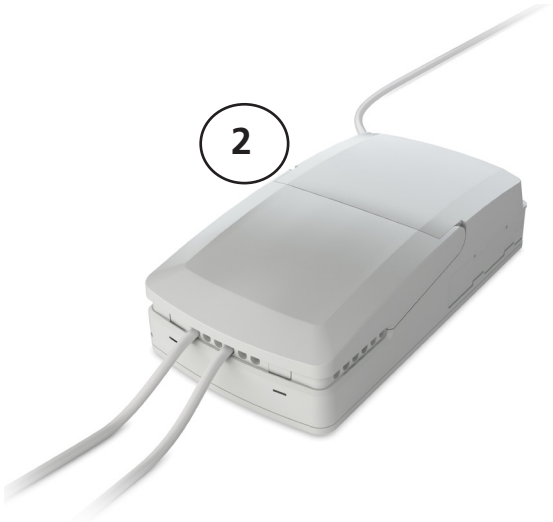

LED indicator



The OPS is equipped with LED indication. When mains power is connected, the LED turns green. The LED turns yellow for as long as the pressure lasts.

Connected to MAINS	
LED colour	**Indication of operation**
Green	**On mains.** The system is working ok and is ready for normal operation.
Yellow	**On mains, activated by hand control.** The system is working.

Recommendations

- LINAK recommends safe cabling to avoid cable damage caused by pulling.
- A product review as to current cut-off limits must be requested by the sales department.
- Always use matching cable plug for the respective product.
- Push plugs fully into correct sockets and make sure they are firmly inserted.
- Mount the OPS box lid and close lid until locked in place.

Heat pad cable

Always use 6-wire cables.

Please note that angled heat pad cable plugs are required for connection to the control box.

Order no. 0965361-A (1100 mm straight cable).

Warnings

- Use EPR or ensure that the user takes care not to squeeze the mains cable.
- Always check correct assembly after mounting and service to ensure that the cable lock is mounted. (Connectors are usually removed during cleaning)
- Take special precautions concerning 3rd party interfacing. Please contact LINAK for further information.
- Make a review of all product specifications before system set-up if the OPS box current cut-off limit is higher than the maximum allowed current heat pad cut-off.
- Make a proper cable installation to avoid cable interruption and inspect regularly for wear and damage. Replace defective parts.
- Make regular inspections for wear and damage to avoid electrical failure or system disturbance and replace defective parts.
- Make a proper cable installation to avoid short-circuit of hand control cables. Make regular inspection for wear and damage and replace defective parts.

PJ2 – Power Junction Box



The LINAK® Port Junction Box PJ2 offers two extra outputs for the CO control box series. Standardised technology, interfaces and compatibility like the CO control boxes (not compatible with CO53).

The PJ2 for LINAK actuators is intended for the control of, for instance, hospital bed and surgery tables movement.

Usage

Operating temperature	+5 °C to +40 °C
Storage temperature	-10 °C to +50 °C
Relative humidity	20% - 80% – non-condensing
Atmospheric pressure	700 to 1060 hPa
Meters above sea level	Max 2000 meters
Approvals (pending)	- IEC60601-1
	- ANSI/AAMI ES60601-1
	- CSA CAN/CSA-C22.2 NO. 60601-1

Mounting brackets

For mounting with LA40 (Article No.: 1015W1002)

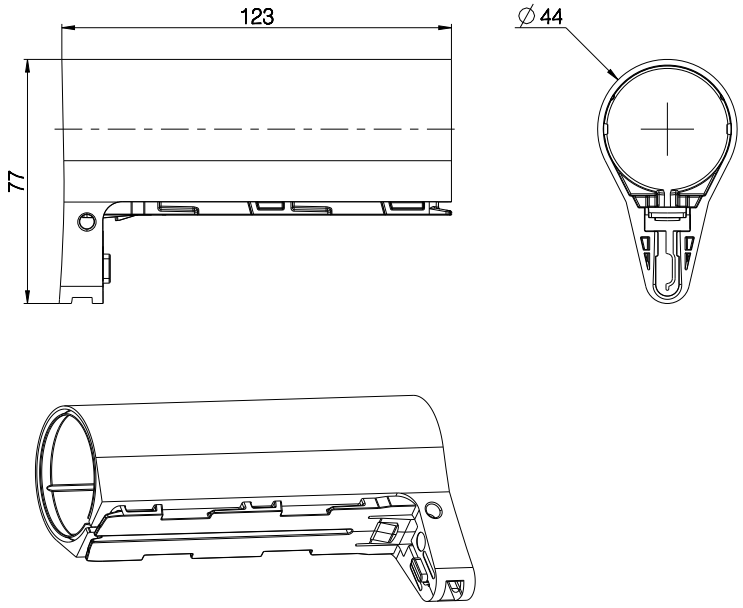

Drawing No.: 1015W4002

For mounting with LA31 (Article No.: 1015W1004)

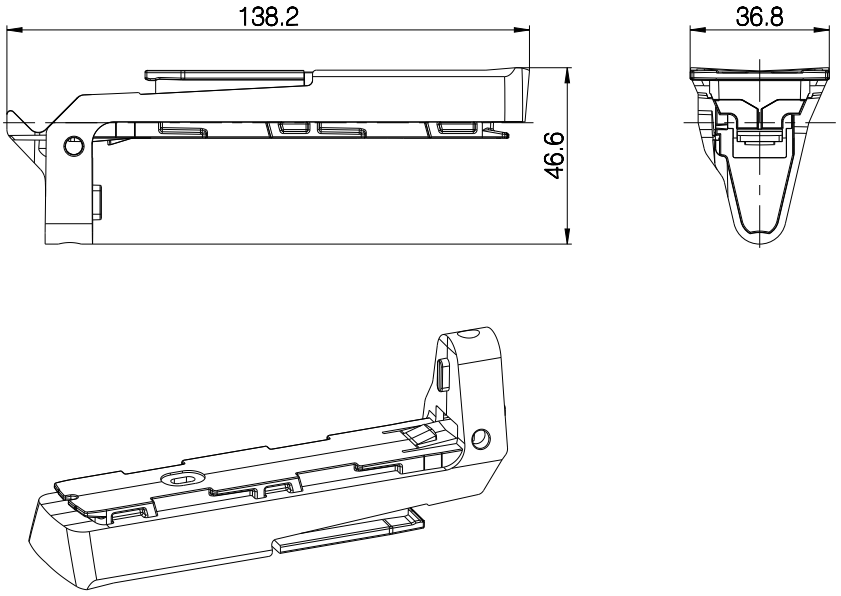

Drawing No.: 1015W4004

For mounting with LA27 (Article No.: 1015W9003)

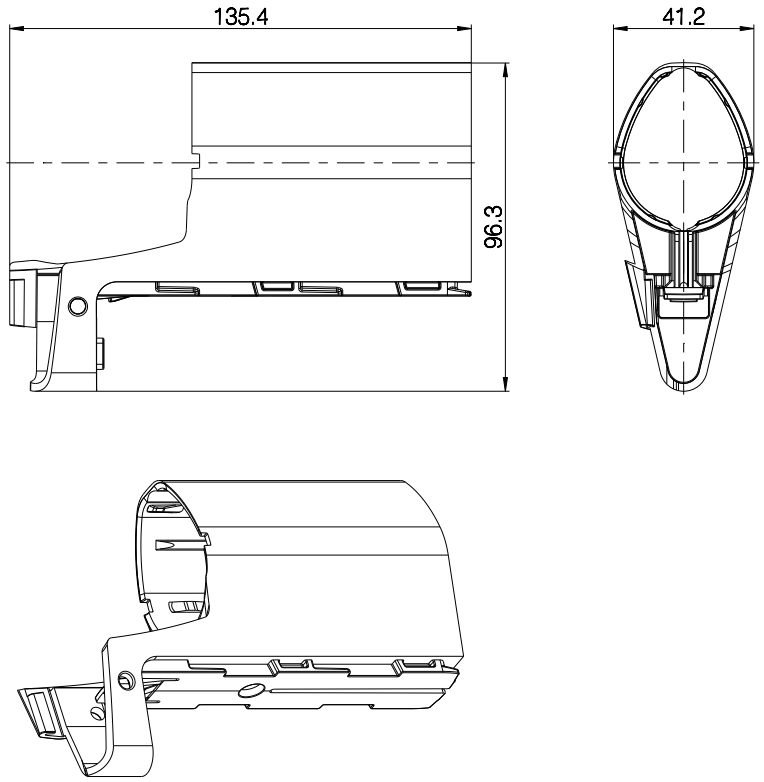

Drawing No: 1015W4003

The adapter 1015W9003 includes a screw that is halfway mounted, thus everything as one part.

Screw head torx size: T15
Screw torque: 1.2 ± 0.2 Nm

Mounting bracket (frame flat) - article No. 1015W1001

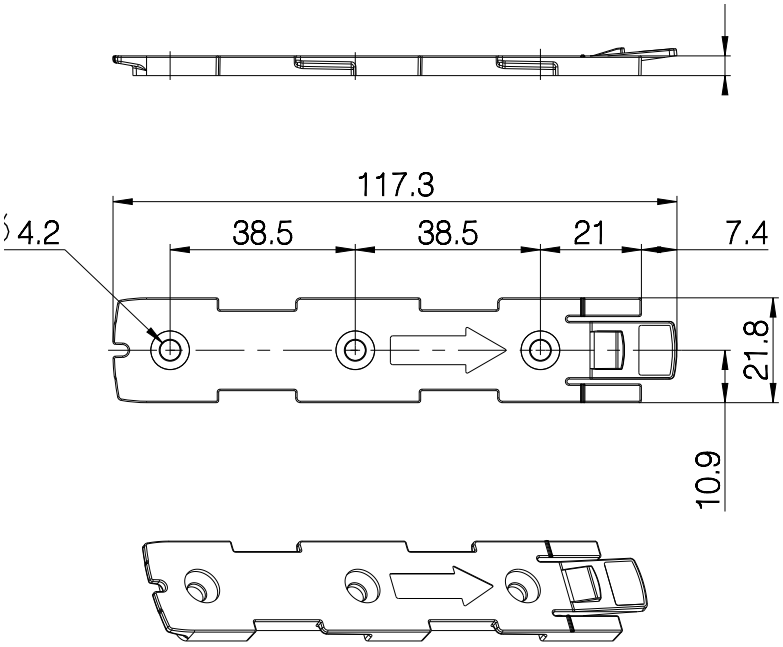

Drawing No.: 1015W4001

Mounting bracket (frame flat) w/M4 nuts - article No. 1015W9009

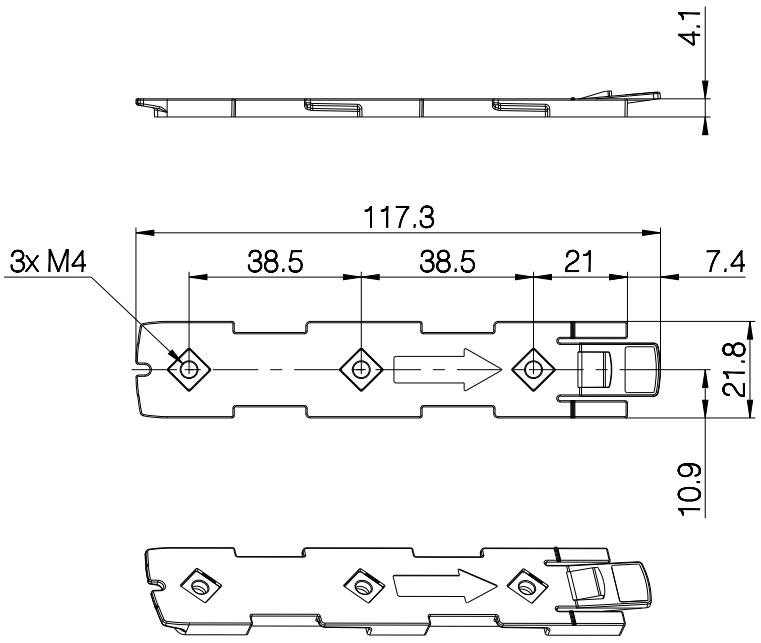

Drawing No.: 1015W4009

It is recommended that the PJ2 is mounted in a position that allows water to escape.

Recommended torque: 0.6Nm +/-0.1

The bracket can be mounted to the bed frame or any other application by following one of the following mounting procedures:

- M5 machine screw with flat washer to be fixed through bracket with nut on the rear side
- Self-tapping screw to be placed through bracket and onto the frame

Mounted on frame

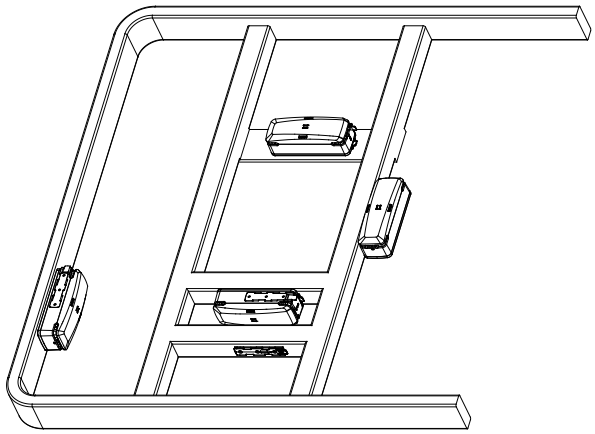

Drawing No.: 1038W4003

Mounting instructions (Example PJ2 with LA40)

When mounting the control box onto the actuator (1)

Simply slide on the bracket until you hear a clear click (2)

Slide on the control box until you hear a click and the box is mounted (3)

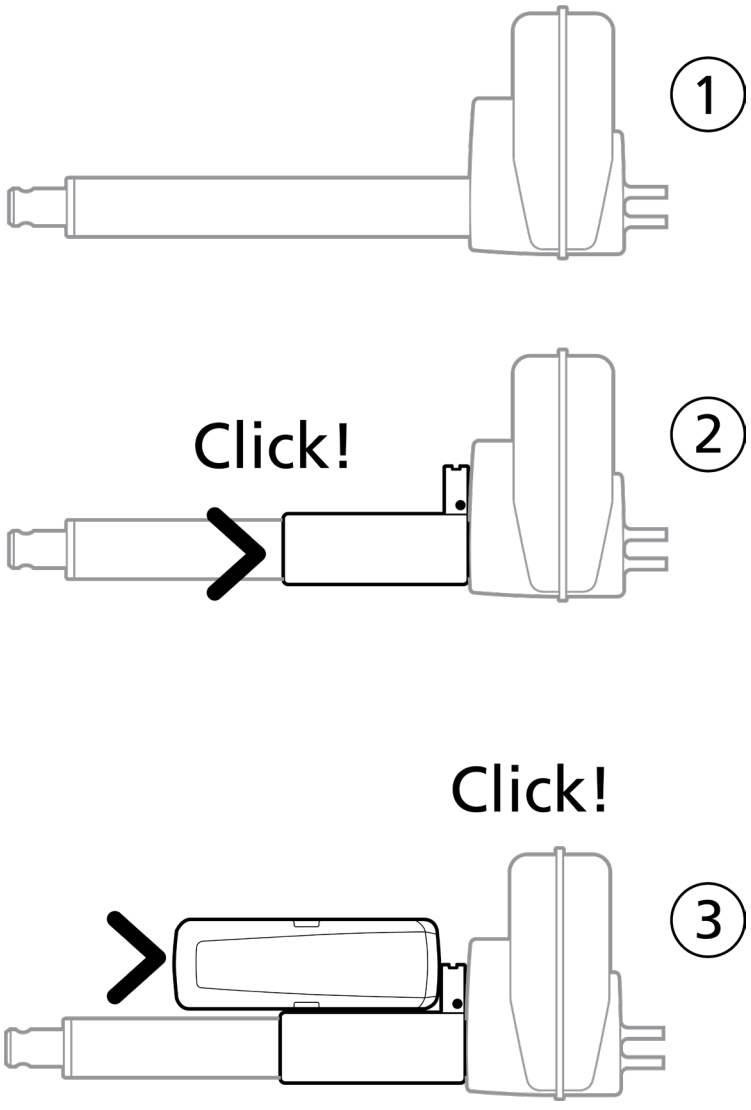

Cables

PJ2 has a uniquely designed cable lid. The lid also works as an integrated cable lock when closed.

1. Mount cable plugs in control box
2. Close lid until lock snaps into place (see arrows)

To allow free access to the cables, the lid has to be removed. It is possible to remove the lid by means of a screwdriver or similar, lifting the lid in each side and pulling it away from the housing.

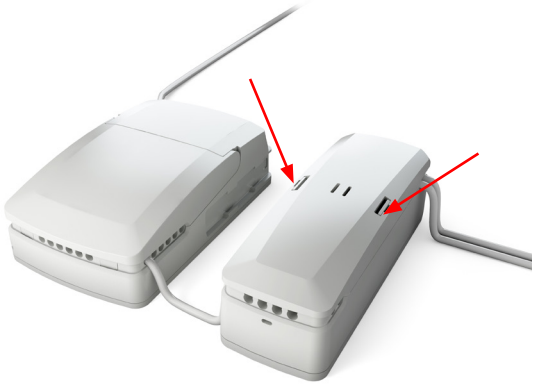



Recommendations

- Always use 6-wire cables for actuators
- Always use 4-wire cables for PCP accessories
- Please note that angled cable plugs are required for connection to the PJ2

Recommendations

- If there is a risk that the system is overloaded and therefore shuts down thermally, LINAK recommends using quick release actuators. These will allow functions to be lowered manually in case of a PJ2 malfunction due to misuse/abuse.
- If the customer has other essential performance than “no unintended movement”, he must consider this in his own risk analysis. LINAK disclaims any liability.
- If the actuator or the control cable is removed from the control box, the cable lock must be applied. To ensure movement in this case, LINAK recommends using quick release actuators in the application.
- To avoid cables from being damaged by pulling, LINAK recommends making safe cabling. If movement is an essential performance, LINAK recommends applying quick release actuators, for example, to ensure movement
- To avoid activation of thermal protection, do not exceed load specifications. If movement is an essential performance, LINAK recommends applying quick release actuators, for example, to ensure movement.
- Sales must request a review of the products according to current cut-off limits.
- Push plugs fully into correct sockets and make sure that the plugs are completely inserted.
- Mount control box lid and close lid until locked in place.

Warnings

- Use EPR or ensure that the user takes care not to squeeze the mains cable.
- Always check correct assembly after mounting and service to ensure that the cable lock is mounted. (Connectors are usually removed during cleaning)
- Always use approved chemicals with the housing as the plastic may show corrosion caused by some chemicals. As a result water may accumulate/gather in housing.
- Take special precautions concerning 3rd party interfacing. Please contact LINAK for further information.
- Make a review of all product specifications before system set-up if the current cut-off limit is higher than the maximum allowed current cut-off for the actuator.
- To avoid cable interruption and actuator defects make a proper cable installation and inspect regularly for wear and damage. Defective parts must be replaced.
- After service inspection, the application must be tested for correct functionality before it is put into operation to avoid actuator plugs being mixed during service. Operators must not be inside entrapment area.
- To avoid electrical failure or system disturbance inspect regularly for wear and damage. Defective parts must be replaced.
- Make a proper cable installation to avoid short-circuit cables for handset/controls. Regular inspection must be made for wear and damage. Defective parts must be replaced.
- Do not mount the actuator with the spindle facing downwards to avoid that the actuator slips off the bracket with the mounted PJ2. The bracket can come loose when exposed to shock or hard vibration, for instance when passing doorsteps. Regular inspection must be made to ensure proper fixation of control box and bracket on actuator.
- PJ2 is ONLY to be used with PCP 2.0 control boxes.

Contacts

FACTORIES

Denmark - Headquarters
LINAK A/S
Phone: +45 73 15 15 15
Fax: +45 74 45 80 48
Fax (Sales): +45 73 15 16 13
Web: www.linak.com

China
LINAK (Shenzhen) Actuator Systems, Ltd.
Phone: +86 755 8610 6656
Phone: +86 755 8610 6990
Web: www.linak.cn

Slovakia
LINAK Slovakia s.r.o.
Phone: +421 51 7563 444
Web: www.linak.sk

Thailand
LINAK APAC Ltd.
Phone: +66 33 265 400
Web: www.linak.com

USA
LINAK U.S. Inc.
Americas Headquarters
Phone: +1 502 253 5595
Fax: +1 502 253 5596
Web: www.linak-us.com
www.linak-latinamerica.com

SUBSIDIARIES

Australia
LINAK Australia Pty. Ltd
Phone: +61 3 8796 9777
Fax: +61 3 8796 9778
E-mail: sales@linak.com.au
Web: www.linak.com.au

Austria
LINAK Zweigniederlassung - Österreich (Wien)
Phone: +43 (1) 890 7446
Fax: +43 (1) 890 744615
E-mail: info@linak.de
Web: www.linak.at - www.linak.hu

Belgium
LINAK Actuator-Systems NV/SA
(Belgium & Luxembourg)
Phone: +32 (0)9 230 01 09
E-mail: beinfo@linak.be
Web: www.linak.be - www.fr.linak.be

Brazil
LINAK Do Brasil Comércio De Atuadores Ltda.
Phone: +55 (11) 2832 7070
Fax: +55 (11) 2832 7060
E-mail: info@linak.com.br
Web: www.linak.com.br

Canada
LINAK Canada Inc.
Phone: +1 502 253 5595
Fax: +1 416 255 7720
E-mail: info@linak.ca
Web: www.linak-us.com

Czech Republic
LINAK C&S s.r.o.
Phone: +42 058 174 1814
Fax: +42 058 170 2452
E-mail: info@linak.cz
Web: www.linak.cz - www.linak.sk

Denmark - International
LINAK International
Phone: +45 73 15 15 15
E-mail: info@linak.com
Web: www.linak.com

Denmark - Sales
LINAK Danmark A/S
Phone: +45 86 80 36 11
Fax: +45 86 82 90 51
E-mail: linak@linak-silkeborg.dk
Web: www.linak.dk

Finland
LINAK OY
Phone: +358 10 841 8700
E-mail: linak@linak.fi
Web: www.linak.fi

France
LINAK France E.U.R.L
Phone: +33 (0) 2 41 36 34 34
Fax: +33 (0) 2 41 36 35 00
E-mail: linak@linak.fr
Web: www.linak.fr

Germany
LINAK GmbH
Phone: +49 6043 9655 0
Fax: +49 6043 9655 60
E-mail: info@linak.de
Web: www.linak.de

India
LINAK A/S India Liaison Office
Phone: +91 120 4531797
Fax: +91 120 4786428
E-mail: info@linak.in
Web: www.linak.in

Italy
LINAK ITALIA S.r.l.
Phone: +39 02 48 46 33 66
Fax: +39 02 48 46 82 52
E-mail: info@linak.it
Web: www.linak.it

Japan
LINAK K.K.
Phone: 81-45-533-0802
Fax: 81-45-533-0803
E-mail: linak@linak.jp
Web: www.linak.jp

Malaysia
LINAK Actuators Sdn. Bhd.
Phone: +60 4 210 6500
Fax: +60 4 226 8901
E-mail: info@linak-asia.com
Web: www.linak.my

Netherlands
LINAK Actuator-Systems B.V.
Phone: +31 76 5 42 44 40 /
+31 76 200 11 10
E-mail: info@linak.nl
Web: www.linak.nl

New Zealand
LINAK New Zealand Ltd
Phone: +64 9580 2071
Fax: +64 9580 2072
E-mail: nzsales@linak.com.au
Web: www.linak.com.au

Norway
LINAK Norge AS
Phone: +47 32 82 90 90
E-mail: info@linak.no
Web: www.linak.no

Poland
LINAK Polska
LINAK Danmark A/S (Spólka Akcyjna)
Phone: +48 22 295 09 70 /
+48 22 295 09 71
E-mail: info@linak.pl
Web: www.linak.pl

Republic of Korea
LINAK Korea Ltd.
Phone: +82 2 6231 1515
Fax: +82 2 6231 1516
E-mail: info@linak.kr
Web: www.linak.kr

Slovakia
LINAK Slovakia S.R.O.
Phone: +421 51 7563 444
Web: www.linak.sk

Spain
LINAK Actuadores, S.L.u
Phone: +34 93 588 27 77
Fax: +34 93 588 27 85
E-mail: esma@linak.es
Web: www.linak.es

Sweden
LINAK Scandinavia AB
Phone: +46 8 732 20 00
Fax: +46 8 732 20 50
E-mail: info@linak.se
Web: www.linak.se

Switzerland
LINAK AG
Phone: +41 43 388 31 88
Fax: +41 43 388 31 87
E-mail: info@linak.ch
Web: www.linak.ch - www.fr.linak.ch
www.it.linak.ch

Taiwan
LINAK (Shenzhen) Actuator systems Ltd.
Taiwan Representative office
Phone: +886 2 272 90068
Fax: +886 2 272 90096
E-mail: sales@linak.com.tw
Web: www.linak.com.tw

Turkey
LINAK İth. İhr. San. ve Tic. A.Ş.
Phone: + 90 312 4726338
Fax: + 90 312 4726635
E-mail: info@linak.com.tr
Web: www.linak.com.tr

United Kingdom & Ireland
LINAK UK Limited
Phone: +44 (0)121 544 2211
Fax: +44 (0)121 544 2552
E-mail: sales@linak.co.uk
Web: www.linak.co.uk

DISTRIBUTORS

Argentina
Novotec Argentina SRL
Phone: 011-4303-8989 / 8900
Fax: 011-4032-0184
E-mail: info@novotecargentina.com
Web: www.novotecargentina.com

Colombia
MEM Ltda
Phone: +[57] (1) 334-7666
Fax: +[57] (1) 282-1684
E-mail: servicioalcliente@memltda.com.co
Web: www.mem.net.co

India
Mechatronics Control Equipments India Pvt Ltd
Phone: +91-44-28558484, 85
E-mail: bala@mechatronicscontrol.com
Web: www.mechatronicscontrol.com

Indonesia
PT. Himalaya Everest Jaya
Phone: +6 221 544 8956 /+6 221 544 8965
Fax: +6 221 619 1925
Fax (Sales): +6 221 619 4658
E-mail: hejplastic-div@centrin.net.id
Web: www.hej.co.id

Israel
NetivTech LTD
Phone: +972 55-2266-535
Fax: +972 2-9900-560
Email: info@NetivTech.com
Web: www.netivtech.com

Singapore
Servo Dynamics Pte Ltd
Phone: +65 6844 0288
Fax: +65 6844 0070
E-mail: servodynamics@servo.com.sg

South Africa
Industrial Specialised Applications CC
Phone: +27 011 466 0346
E-mail: gartht@isagroup.co.za
Web: www.isaza.co.za

United Arab Emirates
Mechatronics
Phone: +971 4 267 4311
Fax: +971 4 267 4312
E-mail: mechtron@emirates.net.ae

Terms of use

LINAK® takes great care in providing accurate and up-to-date information on its products. However, the user is responsible for determining the suitability of LINAK products for a specific application.
Due to continual development, LINAK products are subject to frequent modifications and changes.
LINAK reserves the rights to conduct modifications, updates, and changes without any prior notice. For the same reason, LINAK cannot guarantee the correctness and actual status of imprinted information on its products.

LINAK uses its best efforts to fulfil orders. However, for the reasons mentioned above, LINAK cannot guarantee availability of any particular product at any given time. LINAK reserves the right to discontinue the sale of any product displayed on its website or listed in its catalogues or in other written material created and produced by LINAK, LINAK subsidiaries, or LINAK affiliates.
All sales are subject to the 'Standard Terms of Sale and Delivery for LINAK A/S' available on LINAK websites.
LINAK and the LINAK logotype are registered trademarks of LINAK A/S. All rights reserved.

Copyright© LINAK • 2025-01 • UT-63-02-003 L

LINAK®
WE IMPROVE YOUR LIFE